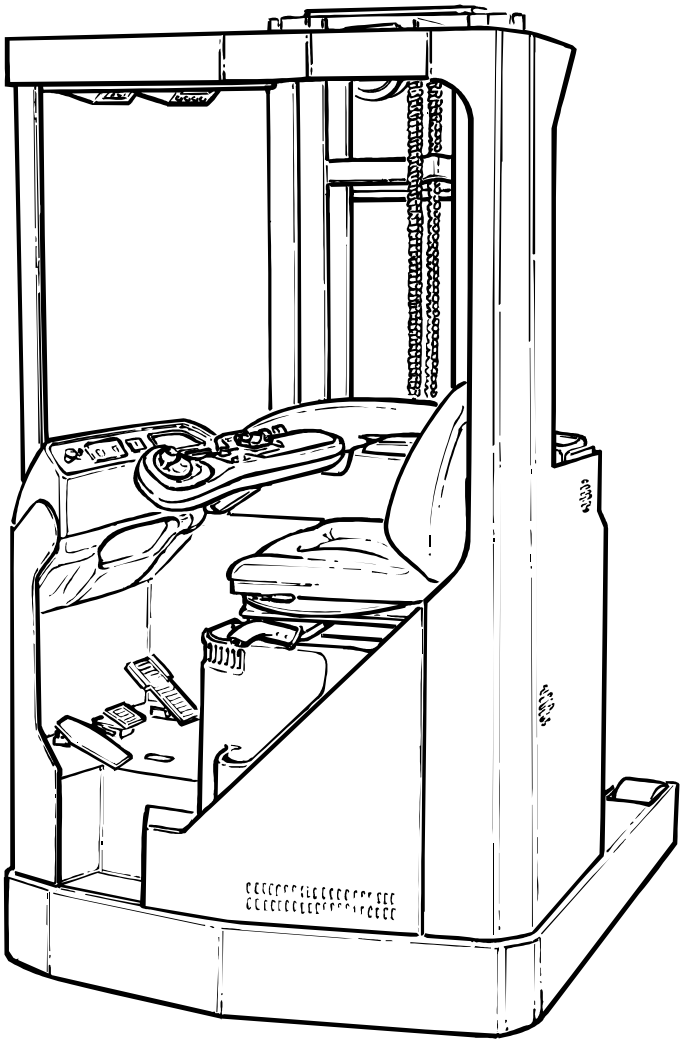

Quality Parts

RR N1 / N2 / N3 (C) / 15 (AC) (ACi)

Valid for machine number.....	328924AA-
Only valid for machine number.....	☐☐☐☐☐☐-☐☐
Ordering number.....	168157
Date	1998-11-10 / ESDF
Language.....	GB; SE; DE; FR

CLICK HERE TO **DOWNLOAD** THE COMPLETE MANUAL

- Thank you very much for reading the preview of the manual.
- You can download the complete manual from: www.heydownloads.com by clicking the link below

- Please note: If there is no response to CLICKING the link, please download this PDF first and then click on it.

CLICK HERE TO **DOWNLOAD** THE COMPLETE MANUAL

7340-018 **Free initial lift cylinder** **RR N2, N3**
Fri-/initiallyftcylinder; Zylinder Frei- / initialhub; Verins de levage initial et libre

7390-005 **Direction cylinder, power trac** **Sideshift**
Omställningscylinder, power trac; Umstell- / umschalt Zylinder, power truc; Verins de direction

7410-001 **Fork, carpet boom, hook**
Lyftgaffel, pik; Hubgabel, Dorn; Fourche, crochet

9000 Optionals / attachments

Tillbehör/extra utrustning; Zubehör / zusatsausrüstung; Options

9180-001 **Fork extensions**
Förlängningsgaffel; Verlängerungsgabel; Rallonges de fourches

9330-002 **Radio / recorders**
Radio/bandspelare; Radio / Kassetengerät; Radio / magnétophone

9360-004 **Extra lights**
Extra belysning; Zusatzbeleuchtung; Eclairage supplementaire

9370-003 **Warning lights / alarm**
Varningsljus/backlarm; Warnlicht / alarm / rückwärtsf.; Gyrophare / alarme

9390-005 **Positioning equip. TV, height preselector** **TV-camera on fork**
Positionerings-/TV utrustn., höjdförval; Positionier-/TV-Anlage, Höhenvorwahl; Equip.positionnement/ video,présélecteur de hauteur

9400-006 **Extra electrical equipment** **TLS**
Extra elektrisk utrustning; Zusatzausrüstung Elektroanlage; Equpement electr. supplementaire

9500-020 **Extra mechanical equipment** **Load guard**
Extra utrustning övrigt; Zusatzausrüstung Sonstiges; Equip. mechanique supplemetaire

9500-071 **Extra mechanical equipment** **Writing table**
Extra utrustning övrigt; Zusatzausrüstung Sonstiges; Equip. mechanique supplemetaire

9550-004 **Battery changing equipment**
Batteribytesanordning; Batteriewechselvorrichtung; Changer de batterie

0620-007 Seat cusions / back rest

[1997-09-18]

Förarstol/dynor; Fahrersitz / Kissen; Coussins de siege / dossier

			401 RR N1-N3 301518 -	
Pos	Description	Pcs	Part No	Note
11	Seat complete(Textile) Stol kpl.(Textil); Sitz kpl.(Textil); Siege cpl.(Textile)	1	157506	Standard design Standardutförande; Normalausrüstung
11	Seat complete(Heated 48V / textile) Stol kpl.(El-uppvärmd 48V / textil); Sitz kpl.(El, Erwärmung 48V / Textil); Siege cpl.(Chauffage él, 48V / textile)	1	160191	
11	Seat complete(Heated 48v / vinyl) Stol kpl.(El-uppvärmd 48v / vinyl); Sitz kpl.(EL, Erwärmung 48v / vinyl); Siege cpl.(Chauffage él 48v / vinyle)	1	160194	
12	Seat cushion(Textile) Sitt dyna(Textil); Sitzkissen(Textil); Siége(Textile)	1	162033-001	
12	Seat cushion(Heated 48V / textile) Sitt dyna(El-uppvärmd 48V / textil); Sitzkissen(El, Erwärmung 48V / Textil); Siége(Chauffage él, 48V / textile)	1	162033-002	
12	Seat cushion(Heated 48v / vinyl) Sitt dyna(El-uppvärmd 48v / vinyl); Sitzkissen(EL, Erwärmung 48v / vinyl); Siége(Chauffage él 48v / vinyle)	1	162033-003	
13	Back rest(Textile) Ryggdyna(Textil); Rückenlehne(Textil); Dossier(Textile)	1	162034-001	
13	Back rest(Heated 48V / textile) Ryggdyna(El-uppvärmd 48V / textil); Rückenlehne(El, Erwärmung 48V / Textil); Dossier(Chauffage él, 48V / textile)	1	162034-002	
13	Back rest(Heated 48v / vinyl) Ryggdyna(El-uppvärmd 48v / vinyl); Rückenlehne(EL, Erwärmung 48v / vinyl); Dossier(Chauffage él 48v / vinyle)	1	162034-003	
14	Micro switch(Complete) Mikrobrytare(Komplett); Mikroschalter(Komplett); Interrupteurs(Complet)	1	162049	
15	House Kåpa; Haus; Chape	1	162047	
16	Repair kit Reperationssats; Reparatursatz; Kit de réparation	1	162048	
17	Lever Spak; Hebel; Levier	1	162035	
18	House Kåpa; Haus; Chape	1	162036	
19	Damper(Kit) Dämpare(Sats); Dämpfer(satz); Attenteur(Jeux)	1	162039	
20	Repair kit Reperationssats; Reparatursatz; Kit de réparation	1	162038	
21	Lever Spak; Hebel; Levier	1	162045	
22	House Kåpa; Haus; Chape	1	162037	
23	Wire Wire; Drahtseil; Filament	1	162046	
24	Gas suspension Gasfjäder; Gasfederung; Suspension à gaz	1	162040	
25	Spring Fjäder; Feder; Ressort	1	162041	
26	Arm Arm; Arm; Bras	1	162044	
27	Arm Arm; Arm; Bras	1	162042	
28	Bracket(Kit) Fäste(Sats); Halterung(satz); Support(Jeux)	1	162043	
29	Bar(Kit) Skena(Sats); Stab(satz); Barre(Jeux)	1	162050	
30	Safety belt(Rolled) Säkerhetsbälte(Rullande); Stehgurt(Rollen); Ceiture de sécurité(Roulant)	1	162031	
30	Safety belt(Without roller) Säkerhetsbälte(Utan rulle); Stehgurt(Ohne rolle); Ceiture de sécurité(Sans roleau)	1	162032	
31	Screw Skruv; Schraube; Vis	2	21159	

0840-016

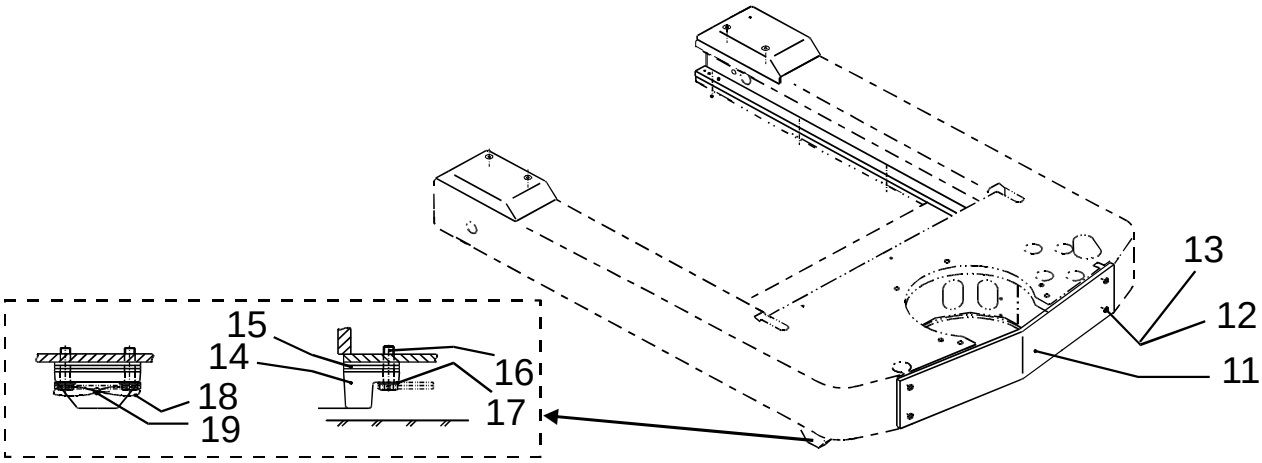

0840-016 Driver protection

[1996-11-11]

Förarskydd; Fahrersschutz; Protection de chauffeur

			401 RR N1-N3 301518 -	
Pos	Description	Pcs	Part No	Note
11	Plate Plåt; Platte; Plaque	1	140767	
11	Plate Plåt; Platte; Plaque	1	155530	Cabin tilt ERGO - REX Hytttilt ERGO - REX; Umklappbar Kabinen ERGO - REX; Cabine oscillant ERGO - REX
12	Nut Mutter; Mutter; Ecrou	4	29590	
13	Screw Skruv; Schraube; Vis	4	28344	
14	Distance piece Distans; Distanz; Distance	2	144098	
15	Shim Shims; Schim; Cale	6	144099	
16	Screw Skruv; Schraube; Vis	4	146834	
17	Washer Bricka; Scheibe; Rondelle	4	20228	
18	Locking wire Låstråd; Schlossdraht; Cheville	2	29759	
19	Closing stamp(Plasic) Plomberingsmärke(Plast); Verschlussmarke(Kunststoff); Plombage(Plastique)	2	20421	

4180-012

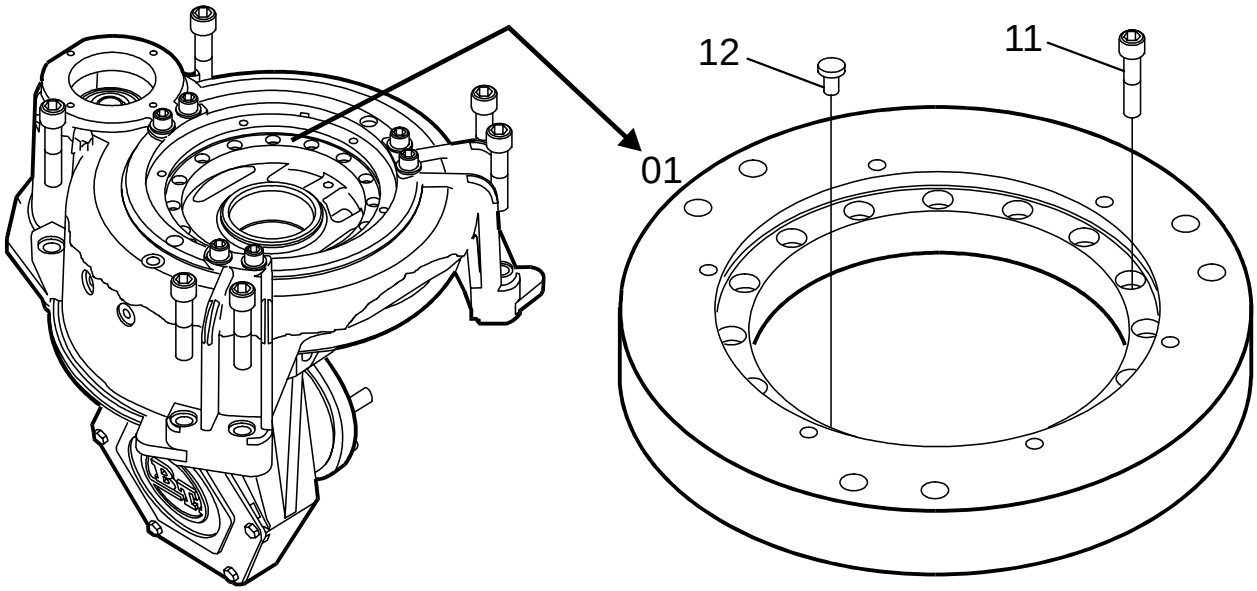

4180-012 Steering bearings, radial bearing

[1998-10-20]

Styrlagring, styrlager/krans (radial); Führungslager, lenkkranz; Roulement direction

			401 RR N1-N3 301518 -	
Pos	Description	Pcs	Part No	Note
01	Bearing complete Lager komplett; Lager komplett; Roulement complete	1	150879	
11	Screw Skruv; Schraube; Vis	15	20365	
12	Air bleeder Luftventil; Luftnippel; Soupape (air)	1	27211	

5320-010

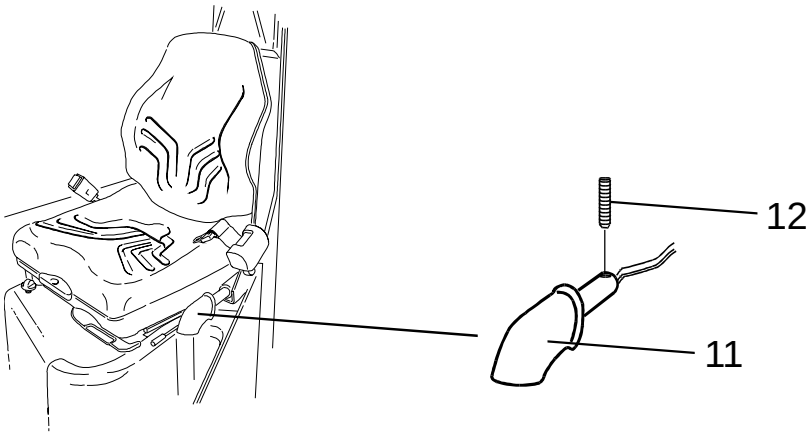

5320-010 Travel direction switch

[1997-09-17]

Färdväljare; Richtungsschalter; Micro de direction

			401 RR N1-N3 301518 -	
Pos	Description	Pcs	Part No	Note
11	Handle(Including switch) Handtag(Med brytare); Handgriff(Mit schalter); Poignée.(Avec rupteur)	1	146435	
12	Screw Skruv; Schraube; Vis	1	25584	

5750-066

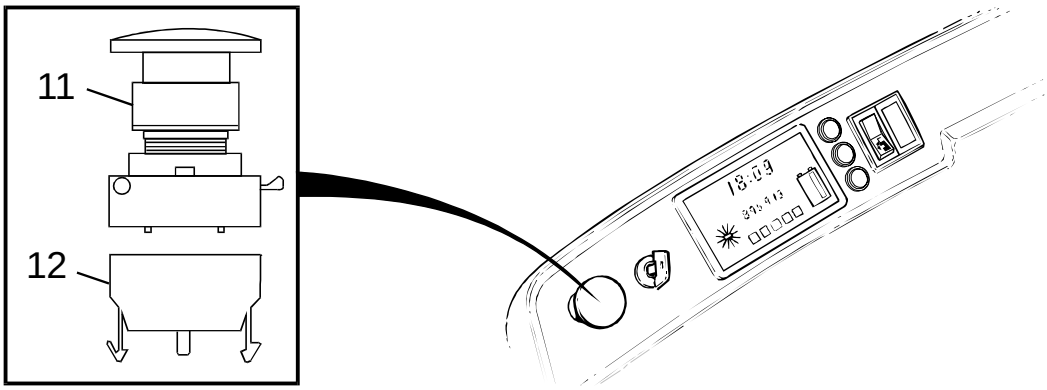

5750-066 Safety / position / switches / sensors [1997-11-05]

Skydds-/läges-/brytare/givare; Schutz- / Positions- / Schalter / Geber; Capteur securite

			401 RR N1-N3 301518 -	
Pos	Description	Pcs	Part No	Note
11	Push-button(Red) Tryckknapp(Röd); Druckknopf(Rot); Bouton(Rouge)	1	155567	
12	Contact device Kontaktblock; Kontakteinheit; Unite de contact	1	155568	

5750-067

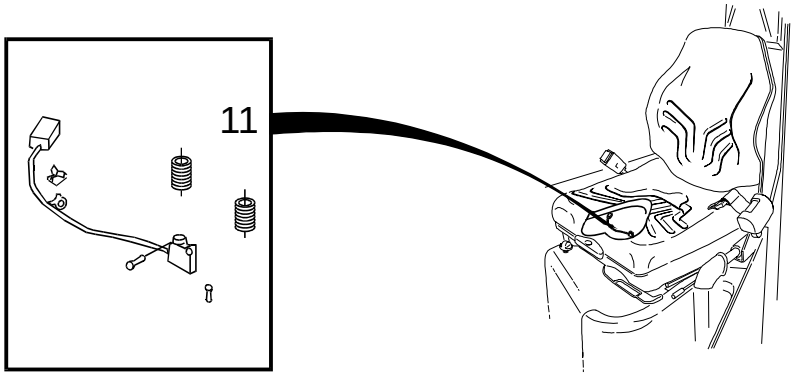

5750-067 Safety / position / switches / sensors [1997-11-05]

Skydds-/läges-/brytare/givare; Schutz- / Positions- / Schalter / Geber; Capteur securite

			401 RR N1-N3 301518 -	
Pos	Description	Pcs	Part No	Note
11	Micro switch(Complete) Mikrobrytare(Komplett); Mikroschalter(Komplett); Interrupteurs(Complet)	1	162049	

CLICK HERE TO **DOWNLOAD** THE COMPLETE MANUAL

- Thank you very much for reading the preview of the manual.
- You can download the complete manual from: www.heydownloads.com by clicking the link below

- Please note: If there is no response to CLICKING the link, please download this PDF first and then click on it.

CLICK HERE TO **DOWNLOAD** THE COMPLETE MANUAL

6110-012

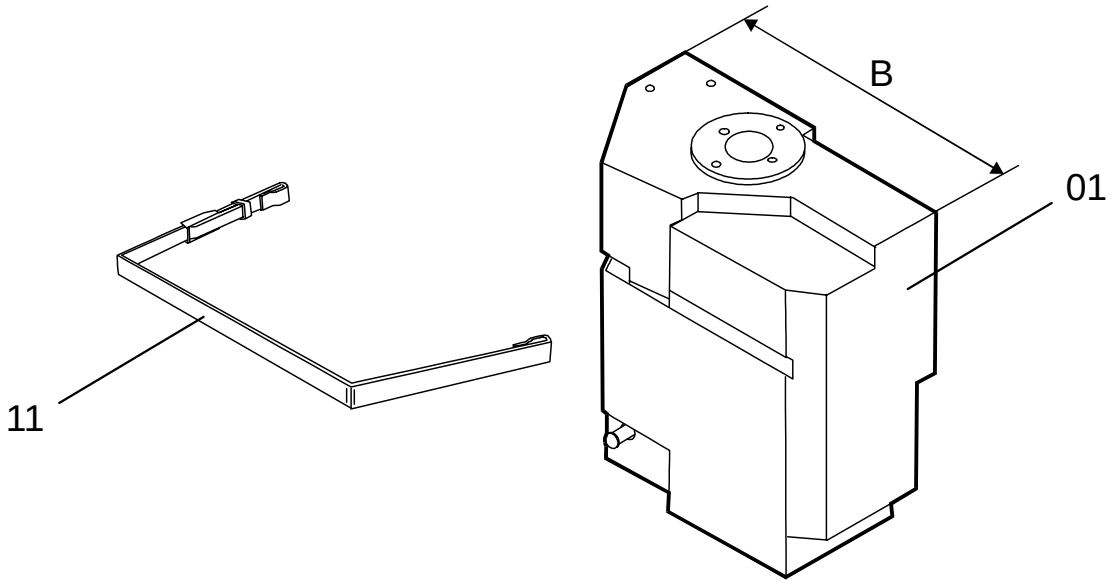

6110-012 Hydraulic tank

[1998-01-12]

Hydraultank; Hydraulikbehälter; Reservoir

			401 RR N1-N3 301518 -	
Pos	Description	Pcs	Part No	Note
01	Tank Tank; Behälter; Reservoir	1	159400	
11	Stropping Spännband; Spannband; Tirant	1	142468	

6120-136 Hoses and pipes, connection, fixation

[1998-11-04]

Rör-/slangledning, koppl., fastsättning; Rohr/Schlauch/Verschraubung. befestig.; Tuyaux / flexibiles raccords

RR B1, E1, N1			401 RR N1-N3 328924 -	
Pos	Description	Pcs	Part No	Note
11	Hose(+ Cable) Slang(+ Kabel); Schlauch(+ Kabel); Tuyau flexible(+ Câble)	1	164114-440	
11	Hose(+ Cable) Slang(+ Kabel); Schlauch(+ Kabel); Tuyau flexible(+ Câble)	1	164114-480	
11	Hose(+ Cable) Slang(+ Kabel); Schlauch(+ Kabel); Tuyau flexible(+ Câble)	1	164114-540	
11	Hose(+ Cable) Slang(+ Kabel); Schlauch(+ Kabel); Tuyau flexible(+ Câble)	1	164114-570	
11	Hose(+ Cable) Slang(+ Kabel); Schlauch(+ Kabel); Tuyau flexible(+ Câble)	1	164114-630	
11	Hose(+ Cable) Slang(+ Kabel); Schlauch(+ Kabel); Tuyau flexible(+ Câble)	1	164114-700	
11	Hose(+ Cable) Slang(+ Kabel); Schlauch(+ Kabel); Tuyau flexible(+ Câble)	1	164114-750	
12	Hose(+ Cable) Slang(+ Kabel); Schlauch(+ Kabel); Tuyau flexible(+ Câble)	1	157609-440	TV - Camera (fork) TV - Kamera (gaffel); TV - Kamera (Gabel); TV - Caméra (fourche)
12	Hose(+ Cable) Slang(+ Kabel); Schlauch(+ Kabel); Tuyau flexible(+ Câble)	1	157609-480	TV - Camera (fork) TV - Kamera (gaffel); TV - Kamera (Gabel); TV - Caméra (fourche)
12	Hose(+ Cable) Slang(+ Kabel); Schlauch(+ Kabel); Tuyau flexible(+ Câble)	1	157609-540	TV - Camera (fork) TV - Kamera (gaffel); TV - Kamera (Gabel); TV - Caméra (fourche)
12	Hose(+ Cable) Slang(+ Kabel); Schlauch(+ Kabel); Tuyau flexible(+ Câble)	1	157609-570	TV - Camera (fork) TV - Kamera (gaffel); TV - Kamera (Gabel); TV - Caméra (fourche)
12	Hose(+ Cable) Slang(+ Kabel); Schlauch(+ Kabel); Tuyau flexible(+ Câble)	1	157609-630	TV - Camera (fork) TV - Kamera (gaffel); TV - Kamera (Gabel); TV - Caméra (fourche)
12	Hose(+ Cable) Slang(+ Kabel); Schlauch(+ Kabel); Tuyau flexible(+ Câble)	1	157609-700	TV - Camera (fork) TV - Kamera (gaffel); TV - Kamera (Gabel); TV - Caméra (fourche)
12	Hose(+ Cable) Slang(+ Kabel); Schlauch(+ Kabel); Tuyau flexible(+ Câble)	1	157609-750	TV - Camera (fork) TV - Kamera (gaffel); TV - Kamera (Gabel); TV - Caméra (fourche)
13	Sealing Tätning; Dichtung; Joint	2	23249	
14	Nut Mutter; Mutter; Ecrou	2	26492	
15	Hose Slang; Schlauch; Tuyau flexible	1	151074-440	
15	Hose Slang; Schlauch; Tuyau flexible	1	151074-480	
15	Hose Slang; Schlauch; Tuyau flexible	1	151074-540	
15	Hose Slang; Schlauch; Tuyau flexible	1	151074-570	
15	Hose Slang; Schlauch; Tuyau flexible	1	151074-630	
15	Hose Slang; Schlauch; Tuyau flexible	1	151074-700	
15	Hose Slang; Schlauch; Tuyau flexible	1	151074-750	
16	Pipe Rör; Rohr; Tube	1	105431	
17	Pipe Rör; Rohr; Tube	1	105430	
18	Connection Koppling; Kupplung; Raccord	1	29532	

6210-017

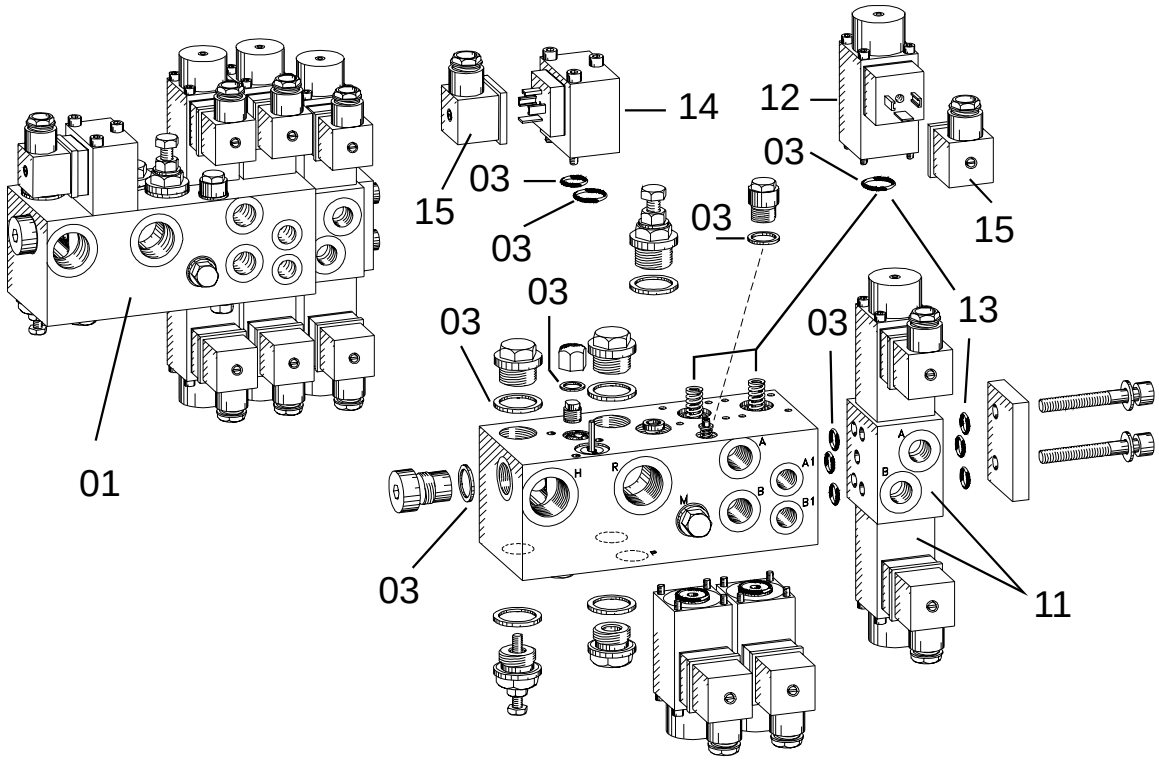

6210-017 Control valve : lift reach tilt

[1996-09-24]

Riktningsventil: lyft utskjut. tilt; Steuerventil : hub neigung rot. klemm.; Valve : lev. retr. incl.

			401 RR N1-N3 301518 -	
Pos	Description	Pcs	Part No	Note
01	Valve unit(Complete) Ventilblock(Komplett); Ventileinheit(Komplett); Soupape unit(Complet)	1	153002	
03	Packing set Packningssats; Packungssatz; Jeux d´ étanchéite.	1	147017	
11	Valve(Complete) Ventil(Komplett); Ventil(Komplett); Soupape(Complet)	1	146963	
12	Magnet Magnet; Magnet; Magnétique	6	146964	
13	Packing set Packningssats; Packungssatz; Jeux d´ étanchéite.	1	146965	
14	Magnet Magnet; Magnet; Magnétique	1	147016	
15	Connector Handske; Stecker; Bloc de connexion	7	24089	

7120-031 Chains / yokes / rollers

[1997-08-12]

Kedja/kedjeok/rullar; Kette / Kettenjoch / Rollen; Chaines / poulies

RR B2, B3, E2, E3, N2, N3			401 RR N1-N3 301518 -	
Pos	Description	Pcs	Part No	Note
11	Roller(A = 78,2 mm, marked A) Rulle(A = 78,2 mm, märkt A); Rolle(A = 78,2 mm, marke A); Roleau(A = 78,2 mm, marqué A)		101423	Lift height = 4400 mm - 5700 mm Lyfthöjd = 4400 mm - 5700 mm; Hubhöhe = 4400 mm - 5700 mm; De élévation = 4400 mm - 5700 mm
11	Roller(A = 78,6 mm, marked B) Rulle(A = 78,6 mm, märkt B); Rolle(A = 78,6 mm, marke B); Roleau(A = 78,6 mm, marqué B)		126011	Lift height = 4400 mm - 5700 mm Lyfthöjd = 4400 mm - 5700 mm; Hubhöhe = 4400 mm - 5700 mm; De élévation = 4400 mm - 5700 mm
11	Roller(A = 78 mm, marked C) Rulle(A = 78 mm, märkt C); Rolle(A = 78 mm, marke C); Roleau(A = 78 mm, marqué C)		127698	Lift height = 4400 mm - 5700 mm Lyfthöjd = 4400 mm - 5700 mm; Hubhöhe = 4400 mm - 5700 mm; De élévation = 4400 mm - 5700 mm
11	Roller(A = 78,4 mm, marked D) Rulle(A = 78,4 mm, märkt D); Rolle(A = 78,4 mm, marke D); Roleau(A = 78,4 mm, marqué D)		159713	Lift height = 4400 mm - 5700 mm Lyfthöjd = 4400 mm - 5700 mm; Hubhöhe = 4400 mm - 5700 mm; De élévation = 4400 mm - 5700 mm
12	Roller(A = 88,9 mm, marked A) Rulle(A = 88,9 mm, märkt A); Rolle(A = 88,9 mm, marke A); Roleau(A = 88,9 mm, marqué A)		105322	Lift height = 6300 mm - 9500 mm Lyfthöjd = 6300 mm - 9500 mm; Hubhöhe = 6300 mm - 9500 mm; De élévation = 6300 mm - 9500 mm
12	Roller(A = 89,3 mm, marked B) Rulle(A = 89,3 mm, märkt B); Rolle(A = 89,3 mm, marke B); Roleau(A = 89,3 mm, marqué B)		126247	Lift height = 6300 mm - 9500 mm Lyfthöjd = 6300 mm - 9500 mm; Hubhöhe = 6300 mm - 9500 mm; De élévation = 6300 mm - 9500 mm
12	Roller(A = 88,7 mm, marked C) Rulle(A = 88,7 mm, märkt C); Rolle(A = 88,7 mm, marke C); Roleau(A = 88,7 mm, marqué C)		127699	Lift height = 6300 mm - 9500 mm Lyfthöjd = 6300 mm - 9500 mm; Hubhöhe = 6300 mm - 9500 mm; De élévation = 6300 mm - 9500 mm
13	Distance piece(30 x 42 x 0,1) Distans; Distanz; Distance		21881	Lift height = 4400 mm - 5700 mm Lyfthöjd = 4400 mm - 5700 mm; Hubhöhe = 4400 mm - 5700 mm; De élévation = 4400 mm - 5700 mm
13	Distance piece(30 x 42 x 0,2) Distans; Distanz; Distance		21882	Lift height = 4400 mm - 5700 mm Lyfthöjd = 4400 mm - 5700 mm; Hubhöhe = 4400 mm - 5700 mm; De élévation = 4400 mm - 5700 mm
13	Distance piece(30 x 42 x 0,3) Distans; Distanz; Distance		21883	Lift height = 4400 mm - 5700 mm Lyfthöjd = 4400 mm - 5700 mm; Hubhöhe = 4400 mm - 5700 mm; De élévation = 4400 mm - 5700 mm
13	Distance piece(30 x 42 x 0,5) Distans; Distanz; Distance		21884	Lift height = 4400 mm - 5700 mm Lyfthöjd = 4400 mm - 5700 mm; Hubhöhe = 4400 mm - 5700 mm; De élévation = 4400 mm - 5700 mm
13	Distance piece(30 x 42 x 1,0) Distans; Distanz; Distance		21885	Lift height = 4400 mm - 5700 mm Lyfthöjd = 4400 mm - 5700 mm; Hubhöhe = 4400 mm - 5700 mm; De élévation = 4400 mm - 5700 mm
13	Distance piece(35x45x0,1) Distans; Distanz; Distance		21948	Lift height = 6300 mm - 9500 mm Lyfthöjd = 6300 mm - 9500 mm; Hubhöhe = 6300 mm - 9500 mm; De élévation = 6300 mm - 9500 mm

7310-037 Lift cylinders

[1997-05-22]

Lyftcylinder; Hubzylinder; Verin de levage

RR B1, E1, N1			401 RR N1-N3 301518 -	
Pos	Description	Pcs	Part No	Note
01	Lifting cylinder compl Lyftcylinder kompl.; Hubzylinder Kompl.; Verin de levage compl.	2	160019-440	
01	Lifting cylinder compl Lyftcylinder kompl.; Hubzylinder Kompl.; Verin de levage compl.	2	160019-480	
01	Lifting cylinder compl Lyftcylinder kompl.; Hubzylinder Kompl.; Verin de levage compl.	2	160019-540	
01	Lifting cylinder compl Lyftcylinder kompl.; Hubzylinder Kompl.; Verin de levage compl.	2	160019-570	
01	Lifting cylinder compl Lyftcylinder kompl.; Hubzylinder Kompl.; Verin de levage compl.	2	160019-630	
01	Lifting cylinder compl Lyftcylinder kompl.; Hubzylinder Kompl.; Verin de levage compl.	2	160019-700	
01	Lifting cylinder compl Lyftcylinder kompl.; Hubzylinder Kompl.; Verin de levage compl.	2	160019-750	
03	Cylinder pipe Cylinderrör; Zylinderrohr; Tube de cylindre	2	155835-440	
03	Cylinder pipe Cylinderrör; Zylinderrohr; Tube de cylindre	2	155835-480	
03	Cylinder pipe Cylinderrör; Zylinderrohr; Tube de cylindre	2	155835-540	
03	Cylinder pipe Cylinderrör; Zylinderrohr; Tube de cylindre	2	155835-570	
03	Cylinder pipe Cylinderrör; Zylinderrohr; Tube de cylindre	2	155835-630	
03	Cylinder pipe Cylinderrör; Zylinderrohr; Tube de cylindre	2	155835-700	
03	Cylinder pipe Cylinderrör; Zylinderrohr; Tube de cylindre	2	155835-750	
05	Piston rod Kolvstång; Kolbenstange; Tige de piston	2	160023-440	
05	Piston rod Kolvstång; Kolbenstange; Tige de piston	2	160023-480	
05	Piston rod Kolvstång; Kolbenstange; Tige de piston	2	160023-540	
05	Piston rod Kolvstång; Kolbenstange; Tige de piston	2	160023-570	
05	Piston rod Kolvstång; Kolbenstange; Tige de piston	2	160023-630	
05	Piston rod Kolvstång; Kolbenstange; Tige de piston	2	160023-700	
05	Piston rod Kolvstång; Kolbenstange; Tige de piston	2	160023-750	
11	Recondition set Renoveringssats; Renovierungssatz; Jeux a´renovation	2	160026	
12	Sealing kit(Piston) Tätningssats(Kolv); Dichtungsatz(Kolben); Jeux d´étanchéite(Piston)	2	160027	
13	Locking wire Låstråd; Schlossdraht; Cheville	2	155892	
14	Ring Ring; Ring; Bague	2	155841	
15	Locking ring Spårring; Schliessring; Circlip	2	20008	
16	Valve Ventil; Ventil; Soupape	2	29774	
17	Screw Skruv; Schraube; Vis	4	29778	
18	Washer Bricka; Scheibe; Rondelle	4	126723-004	
19	Shim(1 mm) Shims; Schim; Cale		105454	
19	Shim(0,5 mm) Shims; Schim; Cale		120531	

CLICK HERE TO **DOWNLOAD** THE COMPLETE MANUAL

- Thank you very much for reading the preview of the manual.
- You can download the complete manual from: www.heydownloads.com by clicking the link below

- Please note: If there is no response to CLICKING the link, please download this PDF first and then click on it.

CLICK HERE TO **DOWNLOAD** THE COMPLETE MANUAL