OPERATION AND MAINTENANCE MANUAL

EP14-20A(C)NT
EP16-20A(C)N

English

639370-EN A

CLICK HERE TO **DOWNLOAD** THE COMPLETE MANUAL

- Thank you very much for reading the preview of the manual.
- You can download the complete manual from: www.heydownloads.com by clicking the link below

- Please note: If there is no response to CLICKING the link, please download this PDF first and then click on it.

CLICK HERE TO **DOWNLOAD** THE COMPLETE MANUAL

	Corrosive hazard
	Electrical hazard

Prohibited action symbols

These symbols are used in warnings and notifications to indicate an action that should not be taken. The prohibited action symbols are shown below.

	No smoking
	Limited or restricted access
	General symbol for prohibited action
	Do not touch

Mandatory action symbols

These symbols are used in warnings and notifications to indicate an action that must be taken. The mandatory action symbols are shown below.

	Wear eye protection
	General symbol for mandatory action
	Read the manual or instructions

Copyright © 2018 by MCFE. All rights reserved.

5 General information

5.1 Intended use

This truck is a 3-wheel or a 4-wheel sit-on operated electric counterbalanced lift truck, with sophisticated controls for truck operation, steering and load handling. It is designed to transport and stack pallets indoors and outdoors. The maximum capacity with load centre distance is indicated on the truck's capacity plate.

5.2 Prohibited use

Do not use the truck

- To transport or lift people
- To transport or lift unstable loads
- To transport or lift damaged loads
- To transport or lift freely suspended or swinging loads
- To transport or lift broken pallets
- To tow another truck or trailers
- To push, drag or sideshift loads that are on the ground
- At premises with insufficient floor load capacity
- At premises with a risk of fire or explosion (ATEX premises)
- At premises with explosive substances
- As a snowplow or a bulldozer for clearing the ground
- As an adjustable work platform
- As a climbing frame or a ladder
- If the maintenance of the truck is neglected
- If the truck is damaged
- If you are under the influence of intoxicating substances
- With the covers open or removed

5.3 Identification plates of the truck

CAUTION

Make sure that all the plates and stickers on the truck are legible and securely attached!

Figure 1: Plates and stickers of the truck overview and *Figure 2: Emergency exit sticker (cabin truck)* show the plates and stickers of the truck and their locations. For more details on the plates and stickers of the truck, see *APPENDIX A: Stickers*.

Copyright © 2018 by MCFE. All rights reserved.

Control	Functionality description
Clamp lever (option)	Use the lever with your right hand. Pull the lever backwards to close the clamp. Push the clamp release button, and then push the lever forward to release the clamp (the clamp lever must be in neutral position when the button is pushed). The lever returns automatically to the central position, when you release it.
Clamp release button (option)	Use the button to enable the release of the clamp. Push the clamp release button, then push the lever forward to release the clamp (clamp lever must be in neutral position when the button is pushed).

5.4.8 Side control panel

7 side control switches can be installed on the side control panel. The switch for manual working lights is standard equipment and the other switches are optional.

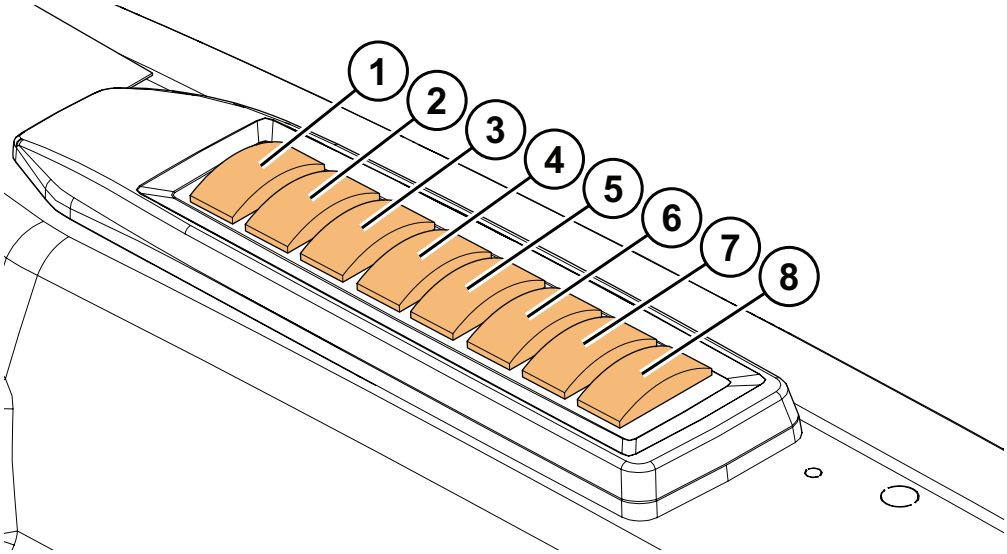

Figure 10: Side control panel overview

1. *Manual working lights (option)*
2. *Automatic working lights (option)*
3. *Emergency flash indication (option)*
4. *Windshield wiper and washer (option)*
5. *Rear window wiper (option)*
6. *Rear window heater (option)*
7. *Reading light switch (option)*
8. *Empty*

Table 3: Control functionalities

Control	Functionality description
Manual working lights (option)	Use the manual working lights switch to control the working lights. The switch has 3 positions: • OFF • Forward lights are on and backward lights turn on automatically when reversing • Forward and backward lights are on
Automatic working lights (option)	When you set the working lights on automatic mode, the lights turn ON automatically, when the lighting of the working

Copyright © 2018 by MCFE. All rights reserved.

5.4.11.9 Traction and hydraulic interlocking icons

The truck is equipped with an interlocking function that disables the traction and hydraulics of the truck, in case the seat switch is not activated but the truck moves.
When the interlocking function activates, the traction interlocking icon **N** is shown on the center information area.

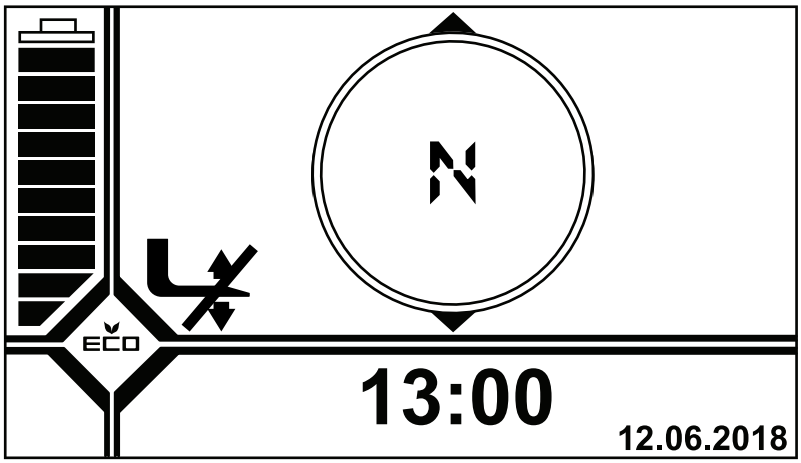

Figure 23: Main view with the traction and hydraulic interlocking icons

To return the traction functions to use:

1. Activate the seat switch,
2. Return the accelerator pedal to the neutral position.

If the seat switch is not activated and an arm rest lever/manual lever is active, the hydraulic interlocking icon is shown on the truck display.

To return the hydraulic functions to use:

1. Activate the seat switch,
2. Return all hydraulic levers to the neutral position.

5.4.11.10 Message area

In case of informational, warning or error messages, the main view of the truck display changes to highlight the important information.

Informational message

An informational message gives instructions to the truck operator in cases in which the truck does not work in the expected way. In case of an informational message, the color of the stripes in the main view changes to blue and an information icon with blue background is shown in the bottom left-hand corner of the truck display. Date and time are replaced with the appropriate informational message. See *Figure 24: Main view with an informational message*.

Copyright © 2018 by MCFE. All rights reserved.

5.4.12.3 Dual pedal and brake pedal

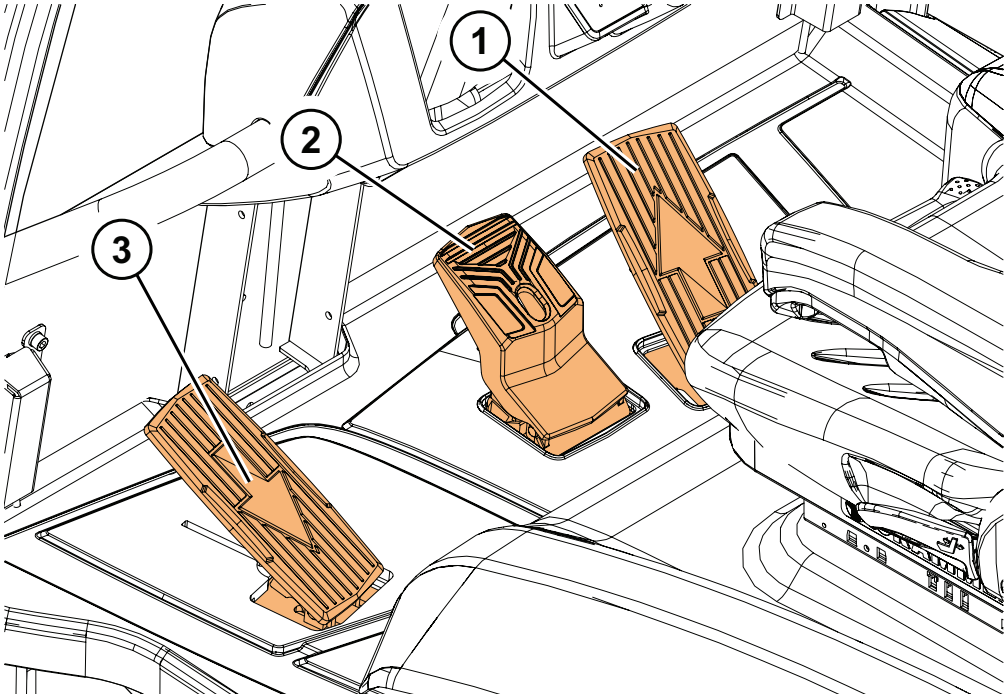

Figure 40: Dual pedal and brake pedal overview

1. *Accelerator pedal forward*
2. *Brake pedal*
3. *Accelerator pedal backward*

5.4.12.4 Pedal functionalities

Table 6: Pedal functionalities

Control	Functionality description
Accelerator pedal	Use the accelerator pedal with your right foot. The more you push the accelerator pedal, the higher the operating speed. **NOTE:** Handle the accelerator pedal gently.
Brake pedal	The truck has an electric service brake for reducing the operating speed. Push the brake pedal gently to slow the speed. The service brake decelerates the truck and charges the battery in the following cases: • When the brake pedal is pushed. • When the operating direction changes. • When the accelerator pedal is released. If the brake pedal is pressed all the way down, a panic braking function is activated which stops the truck using a combination of electric service brake and mechanical magnetic brake. **NOTE:** Practice braking with and without a load.
Operator presence pedal	To drive the truck, push the operator presence pedal down to the operating position.

Copyright © 2018 by MCFE. All rights reserved.

1. Turn the weight adjustment handle out.

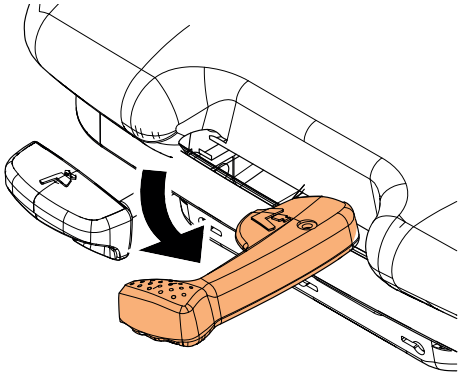

2. Move the weight adjustment handle up or down.

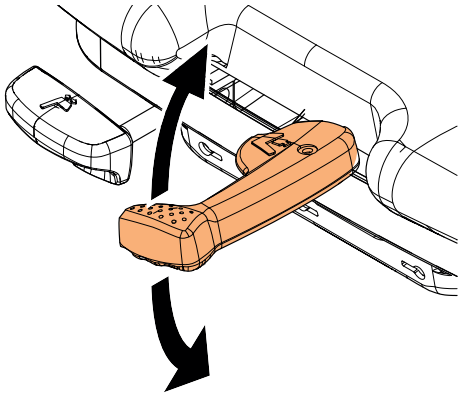

3. Move the weight adjustment handle back to the center position between the adjustment stages.

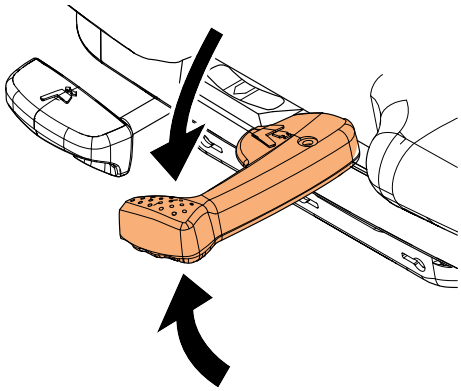

Copyright © 2018 by MCFE. All rights reserved.

WARNING

Lower your body carefully when you enter or exit the operator's compartment so that you do not hit yourself to the overhead guard!

CAUTION

Always be careful with your footing when entering and exiting the operator's compartment.

Wear appropriate footwear to prevent slide.

Make sure that you do not have grease on your shoes before you enter the operator's compartment.

Make sure that your hands are clean and dry to prevent slipping when you hold the handhold.

7.1.2 Emergency exits (cabin truck)

In an emergency, leave the truck through the operator door. If you cannot use the operator door leave the truck through the rear window or the side door. See the emergency exits in *Figure 57: Emergency exits*.

For instructions on how to open the rear window, see *Section 6.2.7 Open the rear window (cabin truck)*.

The rear window is marked with an Emergency exit sign, see *Figure 2: Emergency exit sticker (cabin truck)* and *APPENDIX A: Stickers*.

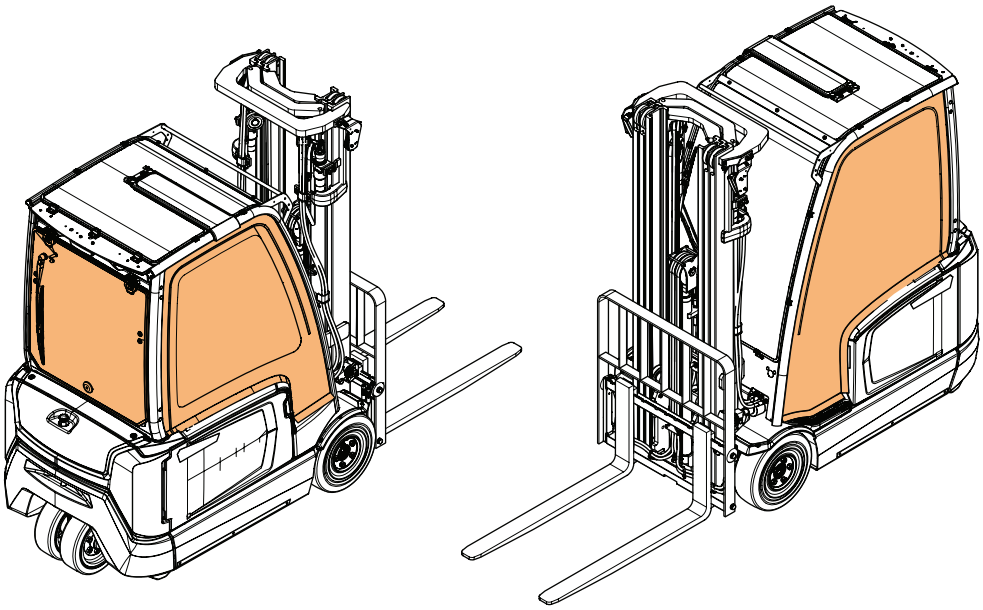

Figure 57: Emergency exits

7.1.3 Operating position

To operate the truck:

- Sit in the operator's seat.
- Fasten the seat belt, see *Section 6.2.5.1 Fasten the seat belt*.

Copyright © 2018 by MCFE. All rights reserved.

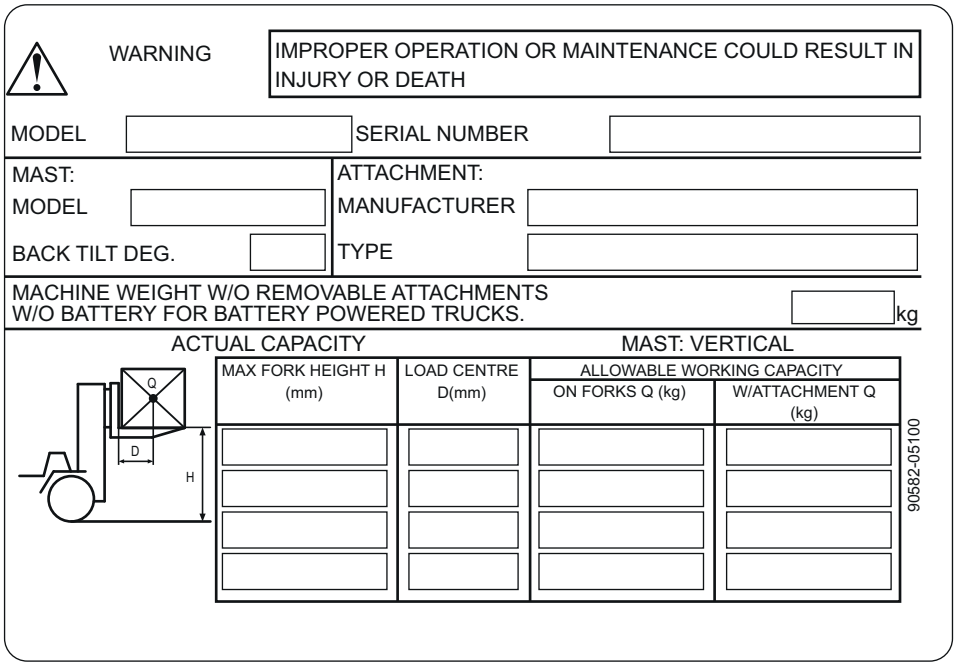

Figure 62: Capacity plate

NOTE: The capacity plate can include more actual capacities at other lifting heights and load centre distances, if applicable.

WARNING

Do not exceed the maximum loading capacity of the truck under any circumstances. Risk of overturning!

7.6.2 How to stack

To stack:

1. Drive towards the shelf or stacking level with the load lowered and the forks tilted upwards.
2. Straighten the forks to a level position with tilt function.
3. Lift the load so that is clearly above the stacking height or the shelf level. Note the height of the upper horizontal beam of the shelf.
4. Drive forward until the forks and load are on top of the shelf.
5. Lower the forks so that they disengage. Make sure that the forks are clear of both the stacking level and the pallet.

NOTE: Heavy loads can cause forks to bend. If heavy pallet is level during lifting, forks are not level after load is disengaged.

6. Reverse from the stacking location.
7. Tilt the forks upwards and lower them to the operating height.

7.6.3 How to unstack

To unstack:

1. Drive towards the shelf or stacking level with the forks lowered and tilted upwards.
2. Straighten the forks to a level position with tilt function.

Copyright © 2018 by MCFE. All rights reserved.

8.5.1 When the battery is charged

1. Set the charger to OFF.

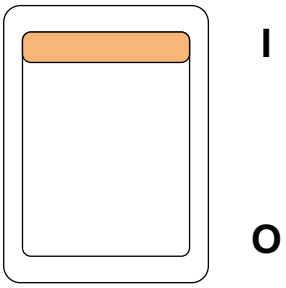

2. Disconnect the battery connector from the charger connector. Hold the connectors; do not pull the cables.

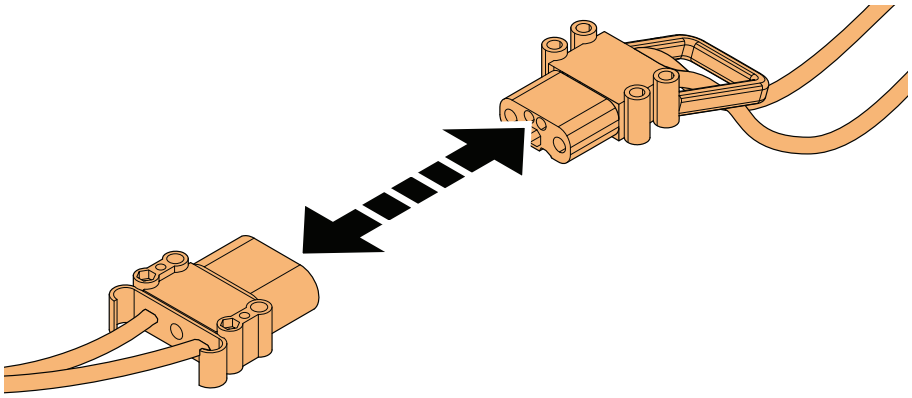

3. Examine the battery according to the battery maintenance instructions of the manufacturer.
4. Connect the battery connector to the truck connector. Make sure that the battery cables remain completely safe within the frame of the truck.

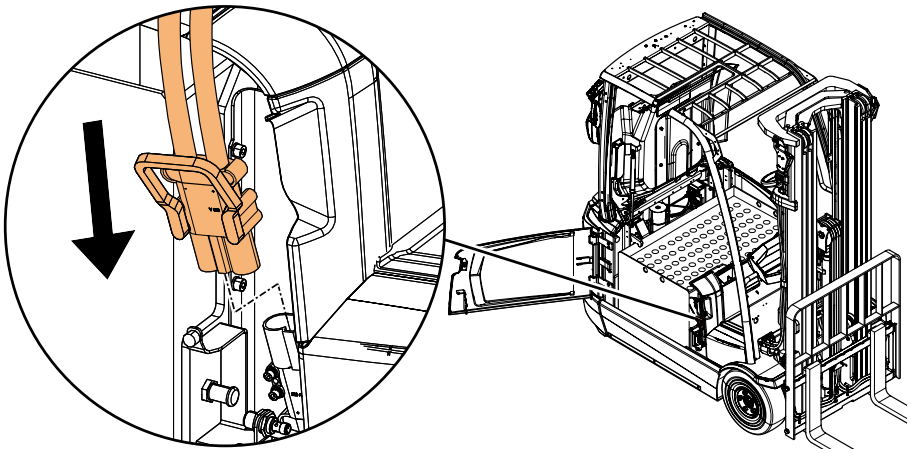

5. Close the battery cover and the door.

Copyright © 2018 by MCFE. All rights reserved.

2. Lift the battery cover up.

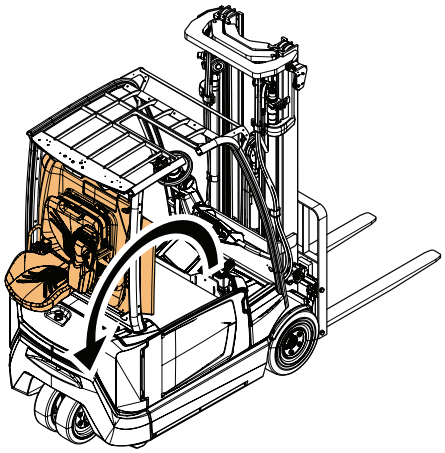

3. Remove the locking pin from the holder.

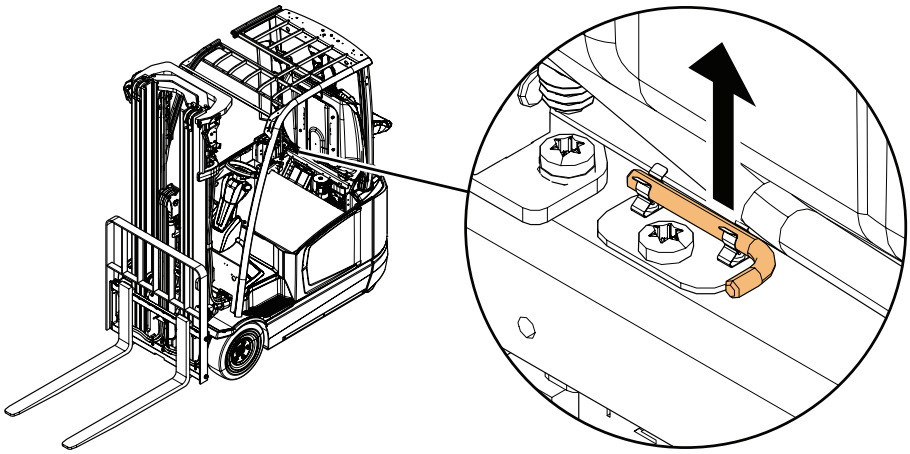

4. Lock the battery cover on the upright position with the locking pin.

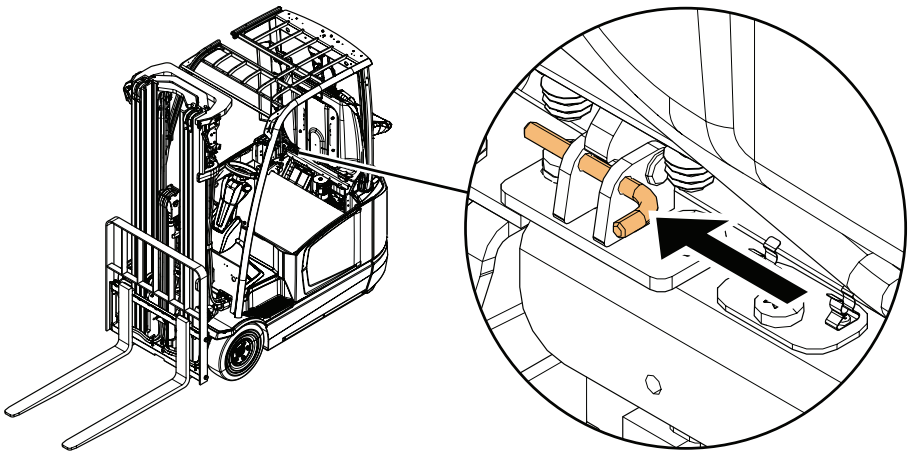

WARNING

When you close the battery cover, do not hold the battery cover from the edges or do not leave your hand between the cover and the truck frame. Risk of crushing! Risk of trapping!

Copyright © 2018 by MCFE. All rights reserved.

- Examine the welds of outer masts and cylinder support for cracking.
- Examine the lifting carriage welds for cracking.
- Examine the rollers, roller pins and welds for cracking and damage.
- Examine the overhead guard for deformation, cracking and damage.

Change the following once a year or 1000 operational hours, which comes first:

- Hydraulic oil
- Transmission oil

For recommended lubricants, see *Section 9.10 Oils and lubricants*.

9.10 Oils and lubricants

NOTE: Make sure that you do not mix different lubricants. It is possible that different brands of lubricants are not compatible with each other.

Table 15: Oils and lubricants

Hydraulic oil	
Ambient temperatures -40...+0°C	ISO VG 15
Ambient temperatures -10...+30°C	ISO VG 32
Ambient temperatures +10...+50°C	ISO VG 46
Transmission oil	
	In accordance with SAE 80W-90; API GL-5
Lubrication points	
Grease	NLGI. No. 1 or 2 grade multipurpose type (lithium base)
Rear axle	
Grease	In accordance with Heliolene Grease GRA 2 Black

9.10.1 Mast chains

For the best chain life, use graphite or molybdenum type lubricants (for example, sprays), which evaporate and leave the graphite or molybdenum on the chain.

CAUTION

If you use oil or grease to lubricate the chains in dusty or sandy operating conditions, dirt particles can stick to the chains and cause rapid wear from abrasion.

9.10.2 Mast channels

For the lubrication of the mast channels, use lubrication grease NLGI No. 2 that contains molybdenum disulphide.

Copyright © 2018 by MCFE. All rights reserved.

11.2 Tilt angle sensor / display status indication with FC

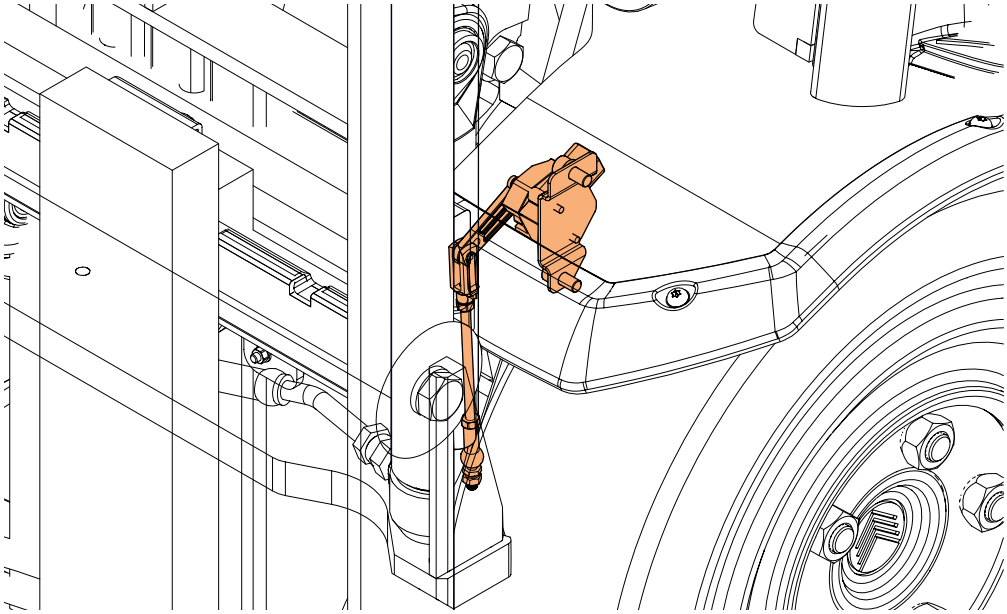

Figure 77: Tilt angle sensor overview

The tilt display informs the truck operator of the tilt angle through the truck display. The tilt angle is measured via an analogue angle sensor.

The tilt angle minimum, maximum and centre positions must all have individual values. The values are set though the TruckTool software. The tilt angle is shown to the truck operator through the truck display with 3 symbols, see *Table 16: Tilt angle symbols*.

Table 16: Tilt angle symbols

Symbol	Description
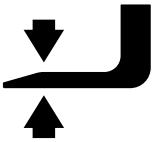	Tilt centered icon
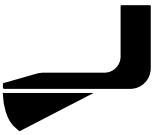	Tilt below center position icon
	Tilt above center position icon

The tilt angle symbols are shown on the top right corner of the truck display.

Copyright © 2018 by MCFE. All rights reserved.

11.6.1 Replace the air filters of the heater

To replace the air filters of the heater:

1. Remove the filters from the rack on the side of the heater.

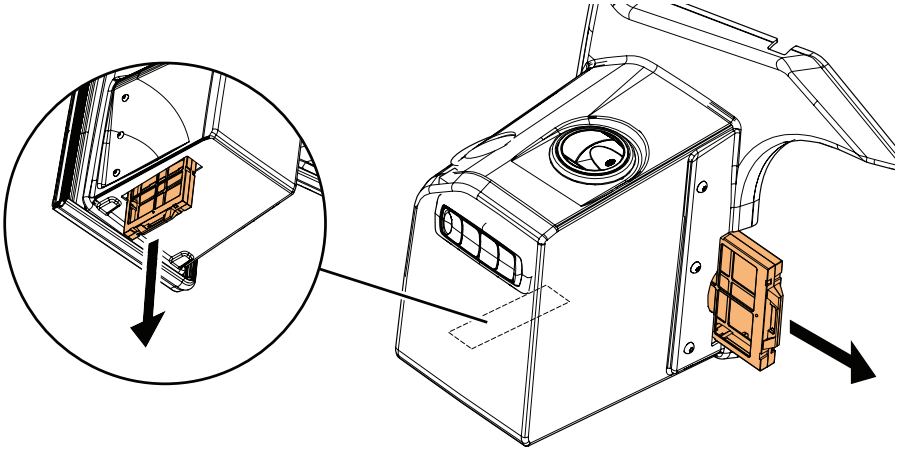

2. Put new filters to the rack.

11.7 Windshield washer (cabin truck)

The front and rear windows of the cabin truck have windshield wipers.

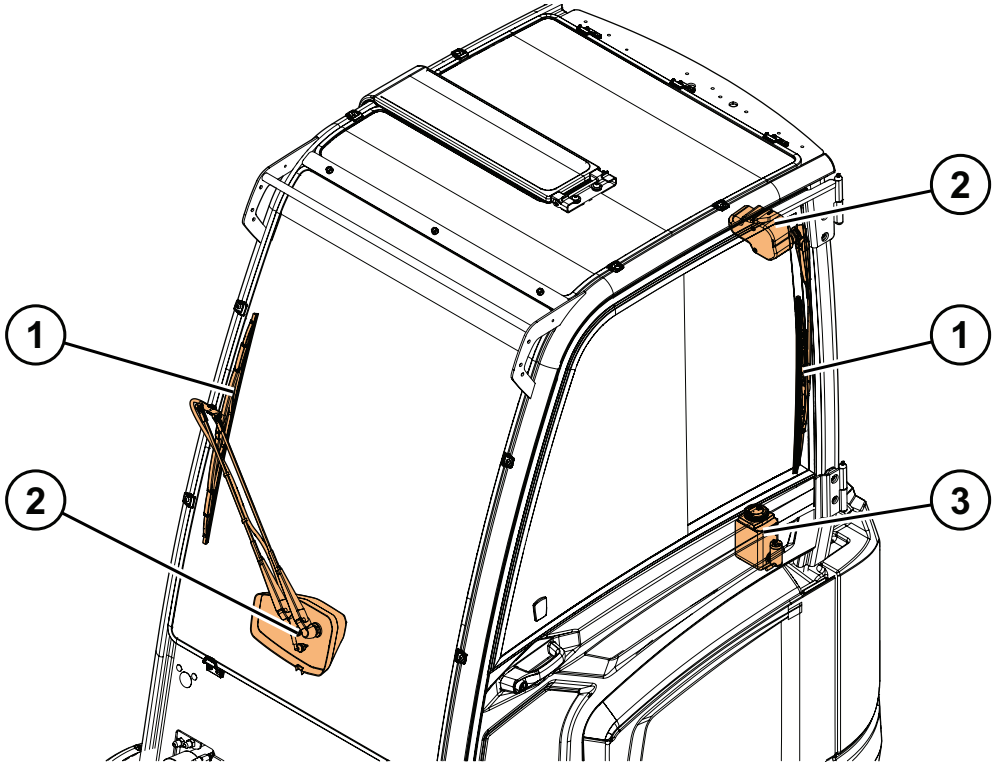

Figure 85: Windshield washer

1. *Windshield wipers*
2. *Windshield wiper motors*
3. *Windshield washer tank and pumps*

Copyright © 2018 by MCFE. All rights reserved.

	Truck type		16ACN	18ACN	16AN	18AN	20AN
8.4	Noise level, value at operator's ear (EN 12053)	dB(A)	65	65	65	65	65
8.5	Towing coupling design / DIN type, ref.		DIN15170-H	DIN15170-H	DIN15170-H	DIN15170-H	DIN15170-H

12.3 Mast availability charts

●	Available option
o	Standard equipment
E	Available, option may extend lead time
—	Not available
CSM	Contact CSM department

Mast type	M-Code	Availability	Height [mm]
Simplex		CSM	2000
		CSM	2600
		CSM	2800
	2FP300	●	3000
	2FP330	●	3290
		CSM	3500
	2SP370	●	3720
	2SP410	●	4090
	2SP450	●	4480
	2SP500	●	5000
	2SP550	●	5500
	2SP600	●	6000
Duplex		CSM	2800
	2FP300	●	3000
	2FP330	●	3290
		CSM	3500
	2FP370	●	3700
	2FP400	●	4030
Triplex	3FP370	●	3700
	3FP400	●	4000
	3FP430	●	4310
	3FP480	●	4750
	3FP510	●	5090
	3FP550	●	5490

Copyright © 2018 by MCFE. All rights reserved.

	Before daily use (Operator)	Monthly (Owner)	1,000 h or every year (Service)
Hoses and cylinders			C
Lubricate the pump axle splines	Every 2 years		
Mast			
Mounting of the mast			C
Visual inspection of the wear level of the mast rollers and contact surface			C
Chain setting, adjustment if necessary	C	C	C
Chain lubrication (clean and lubricate), see *Section 9.10.1 Mast chains*.			G
Chain wear measurement and replacement if over the 2% limit			C
Chain anchors and locking pins check			C
Tightness of the hydraulic connections, hoses and pipes, possible leaks and damages		C	C
Tightness of the cylinders and piston rods, possible leaks and damages			C
Lifting and lowering speed			C
Lubrication of the mast channel surfaces			G
Functionality of the lift sensors in the mast, possible damages			C
Test lift with rated load, and with a customer specific load if necessary			C
Examine the welding in the mast for cracks			C
Mounting of any attachments and load carrying components			C
Examine the fork base for wear and cracking			C
Examine the welding of the cylinder and masts for cracking			C
Examine the welding of the outer masts and cylinder support for cracking			C
Examine the lifting carriage welds for cracking			C
Examine the rollers, roller pins and welds for cracking and damage			C
Apply grease to the lubrication points of the tilt cylinder			C

Copyright © 2018 by MCFE. All rights reserved.

SERVICE MANUAL

EP14-20A(C)NT
EP16-20A(C)N

English

640899-EN A

8.6.12.1 Functionality check of the lever sensors 317
8.6.13 Seat belt switch 318
8.6.13.1 Functionality check of the seat belt switch 318
8.6.14 Seat switch 318
8.6.14.1 Functionality check of the seat switch 319
8.6.15 Switches of the side control panel 319
8.6.16 Manual control switches 320
8.6.17 Driving direction selection switch 320
8.6.17.1 Functionality check of the driving direction selection switch 321
8.6.18 Horn switch 322
8.7 Actuators 322
8.7.1 Traction parking brake 322
8.7.2 Steering feedback device 323

9 Electric system adjustments and measurements 324
9.1 Calibrate the arm rest levers 324
9.2 Insulation resistance test 324
9.2.1 Test voltage 324
9.2.2 Check the insulation tester 324
9.2.3 Measure the insulation resistance 324
9.2.3.1 Insulation resistance of the truck 325
9.2.3.2 Insulation resistance of the battery 326

10 Hydraulic operation 327
10.1 Hydraulic operation overview 327
10.2 Hydraulic operation lifting/lowering 329
10.3 Hydraulic symbols 330
10.4 Hydraulic oil recommendations 332
10.5 Hydraulic valve unit with fingertip controls 333
10.5.1 Emergency lowering valve 334
10.6 Hydraulic valve unit with manual levers 334
10.6.1 Clamp release valve 335
10.7 Hydraulic supply system 336
10.8 Hydraulic flow distribution with additional hydraulic functions 336
10.8.1 Additional hydraulic functions in a truck with the arm rest 337
10.8.2 Additional hydraulic functions in a truck with the manual levers ... 338
10.9 Hydraulic system maintenance 338
10.9.1 Remove the hydraulic oil suction filter 338
10.9.2 Clean the oil tank 340
10.9.3 Replace the hydraulic oil return filter 342
10.9.4 Replace the air breather filter 344
10.9.5 Set the lifting pressure 344
10.9.6 Disassemble the coils 346
10.9.7 Disassemble the M1, M2 and M9 valves 347
10.9.8 Remove the clamp release valve 347

11 TruckTool Diagnostics 349
11.1 Overview 349
11.2 Location of the service socket 349

12 Parameter descriptions 350

13 Service data 351

Copyright © 2018 by MCFE. All rights reserved.

- Do not mix different lubricants. It is possible that different brands of lubricants are not be compatible with each other. Only use lubricants recommended by the manufacturer.
- Repairs that need welding must be done only with the applicable reference information and by personnel trained in welding procedures. Determine the type of metal and select the correct welding procedure and electrodes, rods or wire to provide a weld metal strength equivalent at least to that of the parent metal.
- When you weld, always disconnect the battery and electronic devices. Remove all paint from a 10 cm radius from the welding point to avoid creating toxic gases during welding.
- Use the correct lifting procedures when you remove components.
- Be careful when you remove cover plates. Gradually, remove the last 2 bolts or nuts at the opposite ends of the cover or device. Before you remove the last 2 bolts or nuts, turn the cover loose to release springs or other pressures.
- Be careful when you remove filler caps, breathers and plugs on the truck. Put a cloth around the cap or plug to make sure that you do not become sprayed or splashed by liquids under pressure. Be aware that the liquids spray and splash more easily immediately after you have stopped the truck, because the fluids are very hot.
- Only use well-maintained tools. Also, make sure that you use the tools in a correct way.
- Reinstall all fasteners with the same part number. If a replacement is necessary, do not use a fastener of lesser quality.
- Do not cause damage to the wiring during the removal process. Do not use damaged wiring. When you install the wiring back, make sure the wiring does not touch sharp corners or hot parts. Put all wiring away from the oil pipe.
- Loose or damaged fuel, lubricant and hydraulic lines, tubes and hoses can cause fires. Do not bend or hit high pressure lines or install ones that are bent or damaged. Examine all lines, tubes and hoses carefully. Pin hole (very small) leaks can cause a high velocity oil stream that cannot be seen near the hose. This oil can go through the skin and cause personal injury. Use a cardboard or paper to find pin hole leaks.
- Tighten connections to the correct tightening torque. Make sure that all heat shields, clamps and guards are installed correctly to prevent excessive heat, vibration or rubbing against other parts during operation. Protective shields against oil sprays onto hot exhaust components in the event of a line, tube or seal failure must be installed correctly.
- Do not operate the truck, if a rotating part is damaged or touches another part during operation. All high speed rotating components that are damaged or altered must be examined for balance before you use them again.

3.7 Operating temperature

The truck can be continuously operated at a temperature of -20...+45°C. The recommended humidity is 30...95% (non-condensing).

If the operating temperatures differ from those mentioned above, contact the truck dealer and acquire a truck specifically designed for cold and freezing or extremely high temperatures. A special machine for cold conditions can be used in temperatures down to -35 °C.

Copyright © 2018 by MCFE. All rights reserved.

Control	Functionality description
Fork positioner lever (option)	Use the lever with your right hand. Push the lever forward to move the forks apart. Pull the lever backward to move the forks together. The lever automatically goes back to the central position, when you release it.
Rotation lever (option)	Use the lever with your right hand. Push the lever forward to rotate the clamp or load counterclockwise. Pull the lever backward to rotate the clamp or load clockwise. The lever automatically goes back to the central position, when you release it.
Extension lever (option)	Use the lever with your right hand. Push the lever forward to extend the forks. Pull the lever backward to retract the forks. The lever automatically goes back to the central position, when you release it.
Clamp lever (option)	Use the lever with your right hand. Pull the lever backward to close the clamp. Push the F2 button, then push the lever forward to release the clamp (clamp lever must be in neutral position when F2 button is pushed). The lever automatically goes back to the central position, when you release it.
F2 button	The F2 button can be used to give an additional feature for the following levers: • F2 button + Tilt lever: Tilt auto centering • F2 button + Clamp lever: Clamp release If your truck has tilt auto centering and clamp release functions, clamp release requires F2 button + double command from the clamp release lever.
Horn	Push the button to give a warning sound.
Operating direction selection switch (option)	Push and release the switch to select the operating direction. Push and hold down the correct direction to enable the slow speed mode. The switch automatically goes back to the central position, when you release it.

4.3.7 Manual levers

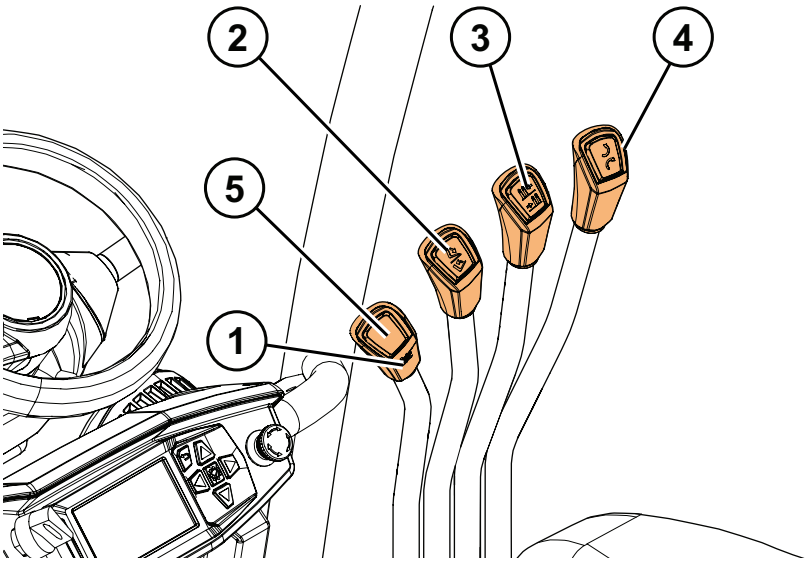

Figure 10: Manual levers overview

1. *Lift lever*
2. *Tilt lever*

Copyright © 2018 by MCFE. All rights reserved.

4.3.15 Motor, hydraulic system and electrical system

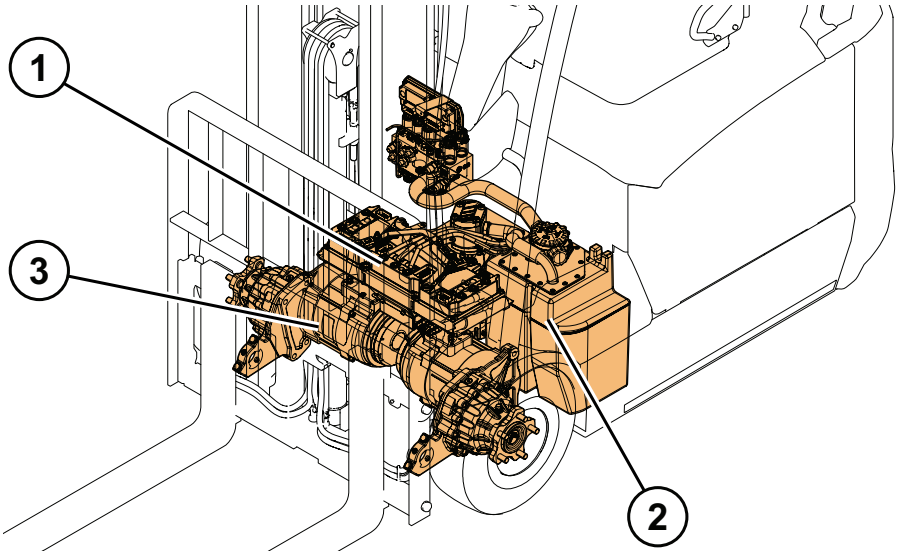

Figure 19: Motor, hydraulic system and electrical system overview

1. *Electric panel*
2. *Hydraulic system*
3. *Drive unit*

4.3.16 Electric system

WARNING

Before you examine the controllers, disconnect the battery connector.

Do not operate the truck with the electric panel uncovered.

CAUTION

Before you examine and replace fuses, set the key switch to the OFF position and disconnect the battery connector.

Copyright © 2018 by MCFE. All rights reserved.

5 Mechanical Maintenance

5.1 Lifting points

CAUTION

Lift the truck and support it with safety blocks or rigid stands.

5.1.1 Jack points

Figure 34: Jack points indicates the correct jack points for lifting the truck up for maintenance.

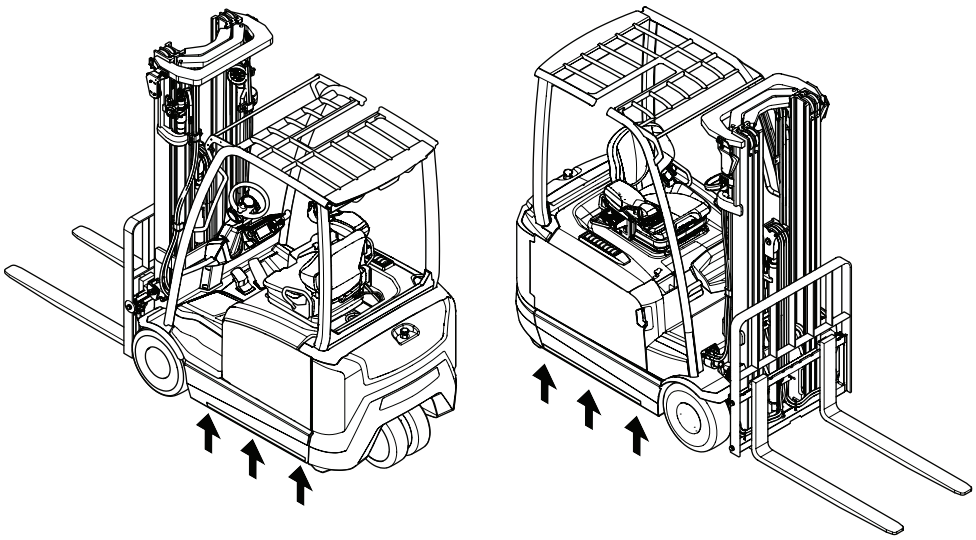

Figure 34: Jack points

NOTE: Truck models with battery sideways exchange option have stickers that indicate the correct jack points. Other truck models can be lifted up from elsewhere, too.

5.1.2 Hoist points

NOTE: The current truck configuration does not allow truck hoisting with a crane.

5.2 Transportation

During transportation, it is important that you secure the truck so that it does not move. You can use ropes or chains to secure the truck.

The transportation of the truck can be done in 2 ways:

- Mast installed to the truck.
- Mast removed from the truck.

Copyright © 2018 by MCFE. All rights reserved.

4. Lock the battery cover on the upright position with the locking pin.

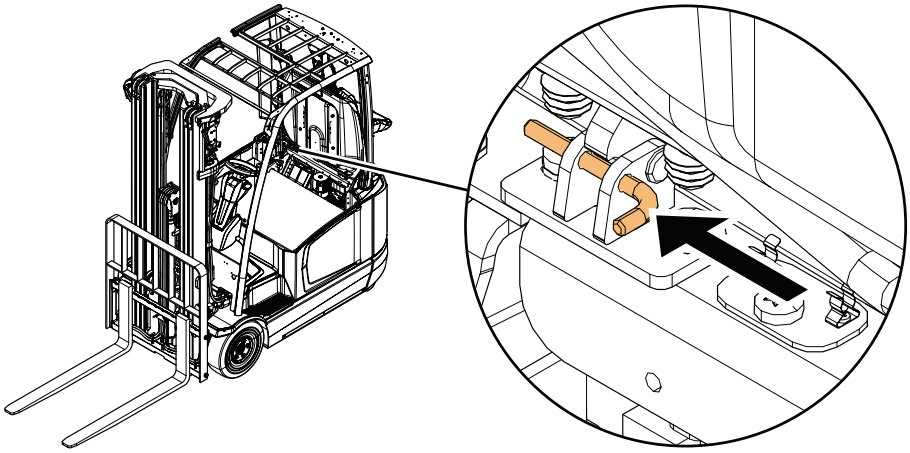

WARNING

When you close the battery cover, do not hold the battery cover from the edges or do not leave your hand between the cover and the truck frame. Risk of crushing! Risk of trapping!

5.6.5 Remove the back cover

1. Remove the 2 screws.
2. Remove the back cover.

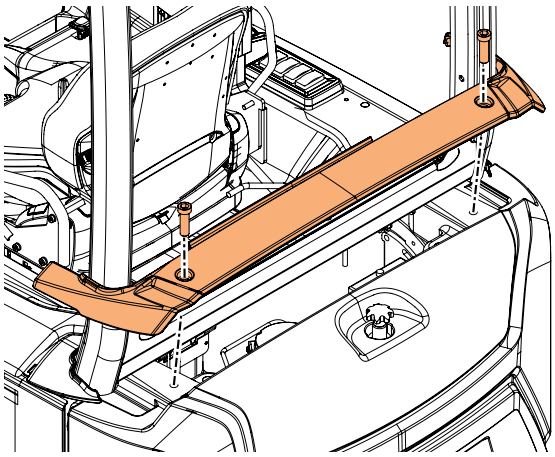

5.6.6 Remove the steering wheel cover

1. Remove the 4 screws and the rubber plugs.

Copyright © 2018 by MCFE. All rights reserved.

5.8.3 Operator presence pedal

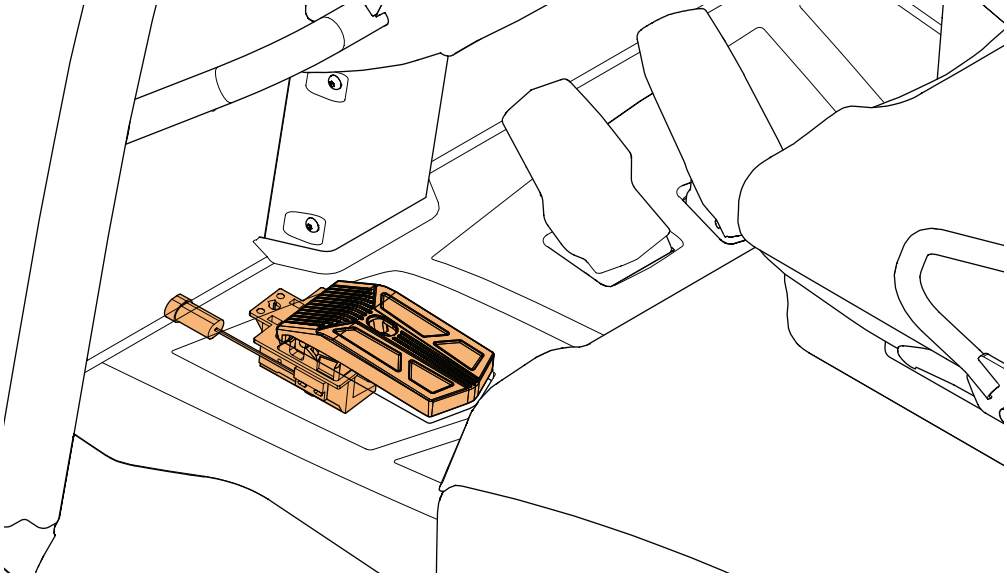

Figure 43: Operator presence pedal overview

5.8.3.1 Remove the operator presence pedal

1. Remove the floor plate. See *Section 5.6.2 Remove the floor plate*.
2. Disconnect the connector.

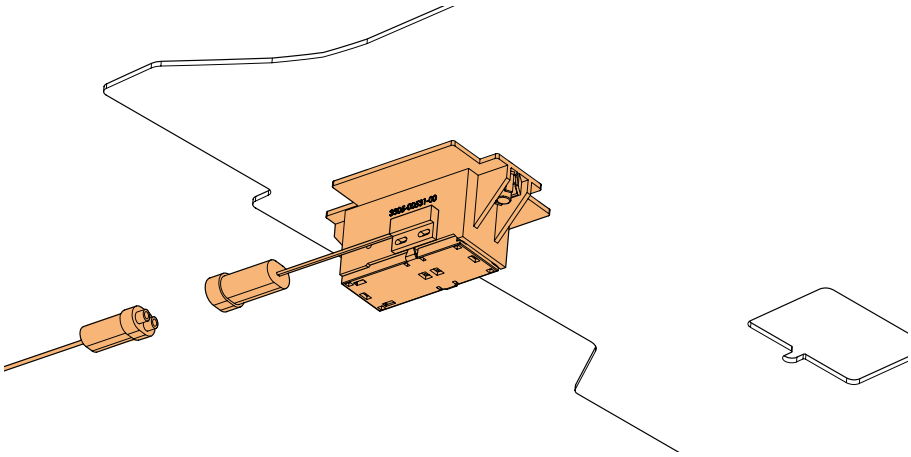

Copyright © 2018 by MCFE. All rights reserved.

8. Remove the drive axle with the pallet truck.

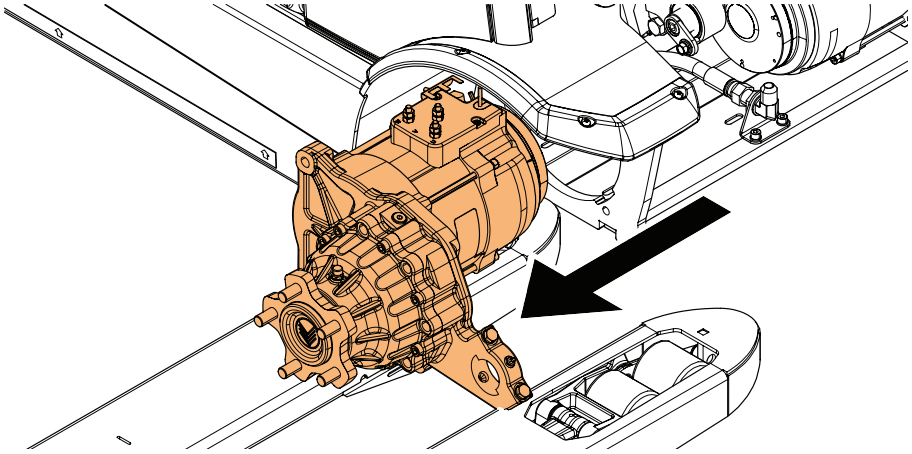

5.9.2 Install the drive axle

1. Use a truck to insert the drive axle inside the chassis.

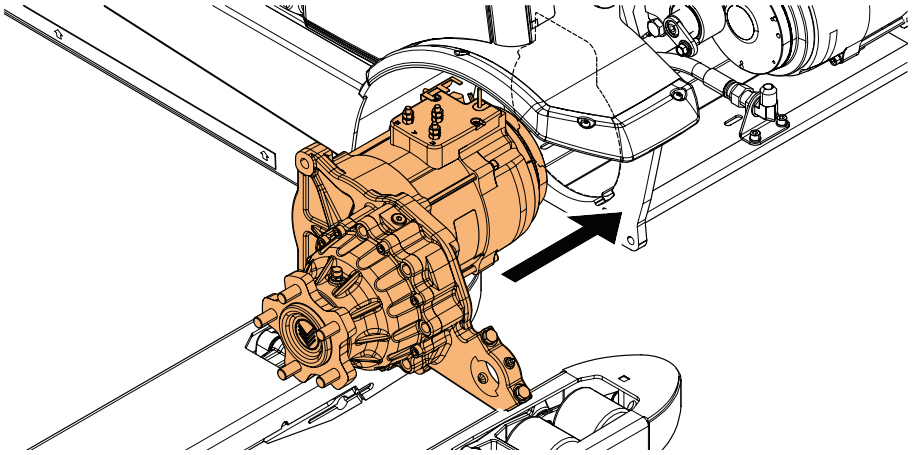

2. Push the axle into its place.

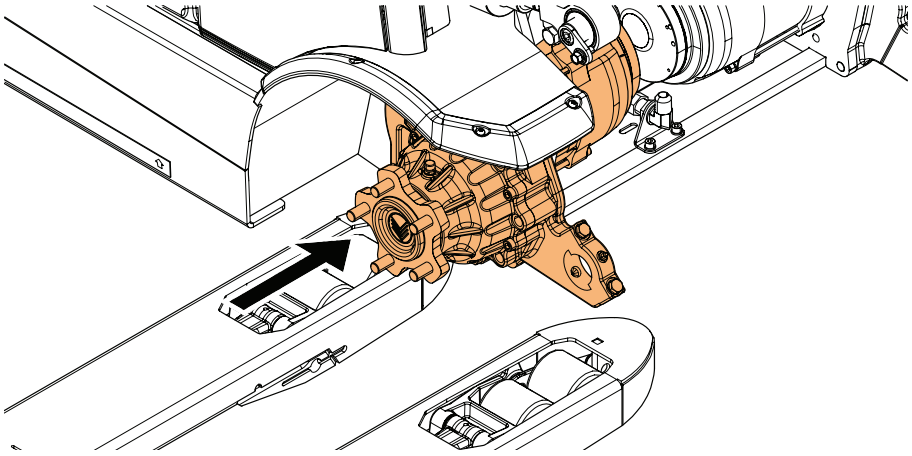

Copyright © 2018 by MCFE. All rights reserved.

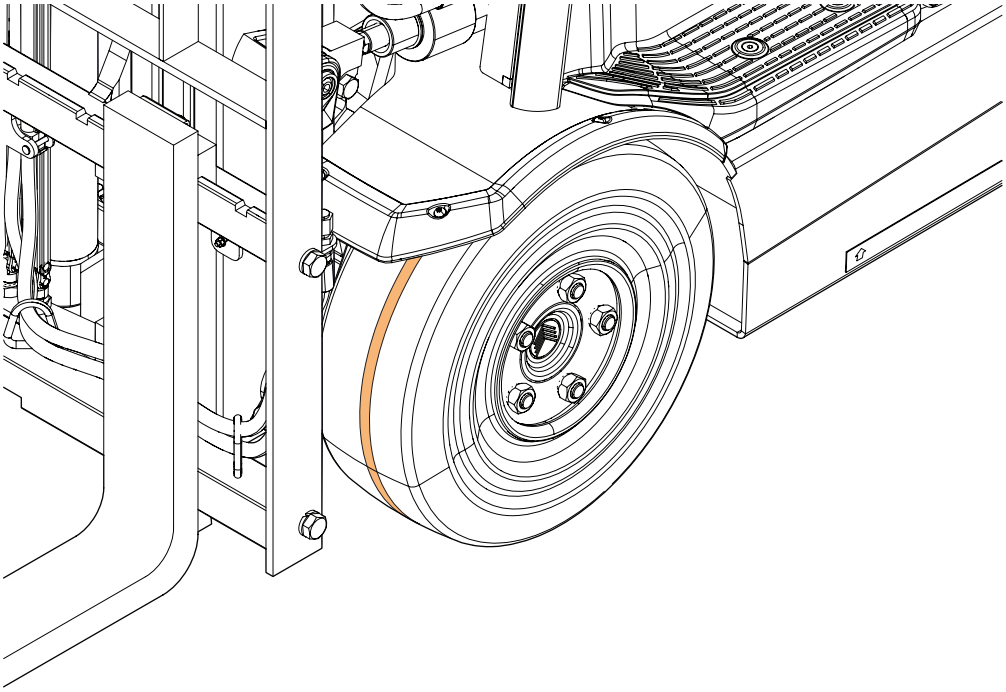

Figure 50: Wear indicator of a solid rubber wheel

5.11.2 Pneumatic wheels

As an alternative for the solid rubber wheels, the truck can have pneumatic wheels.

Replace the wheel if the depth of the tread groove is less than 5 mm or if the mark shows the limit.

For the correct size of the wheel, see the type plate of the truck.

For the correct wheel pressure for the front wheels and rear wheels, see the type plate of the truck.

5.11.2.1 Punctured wheel

CAUTION

A flat wheel tilts the truck, which makes it difficult to turn the steering wheel. Do not operate a truck that has a flat wheel. If you operate a truck with a flat wheel, you can cause an accident.

If the wheel is punctured during truck operation:

1. Stay calm and keep your hands tightly on the steering wheel.
2. Release the accelerator pedal gently to slow down the speed.
3. Park the truck in a safe area.
4. Replace the punctured wheel.

Copyright © 2018 by MCFE. All rights reserved.

3. Put supports below the truck frame.

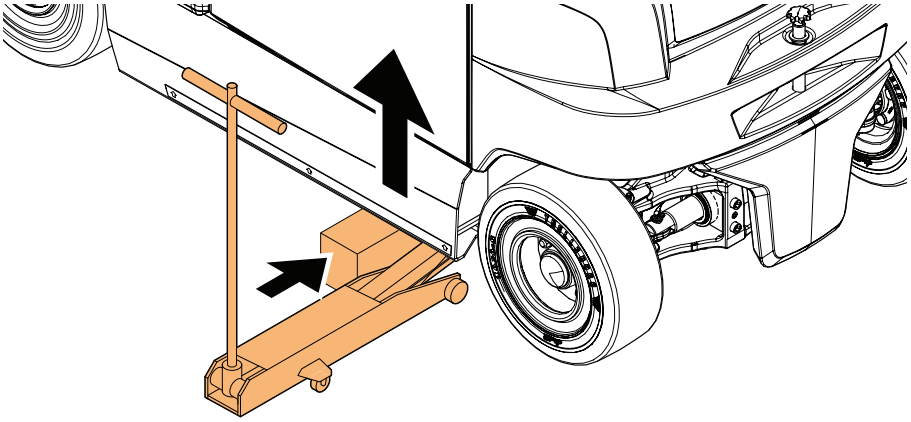

4. Remove the 5 nuts that attach the rear wheel to the truck.
5. Remove the rear wheel.

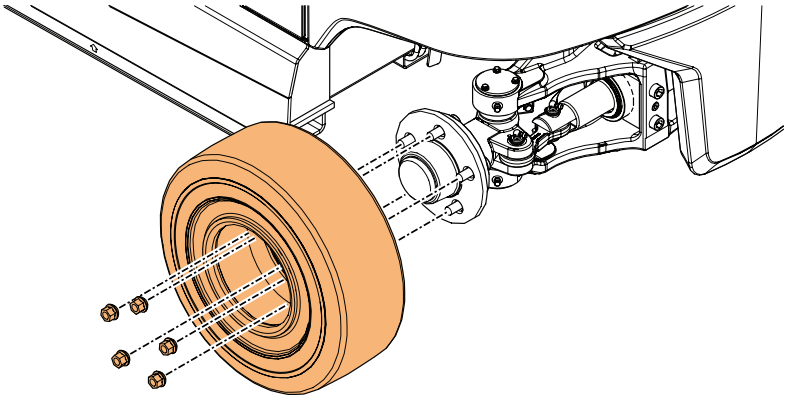

5.13.5 Install the rear wheel (4-wheel models)

NOTE: The correct nut type for the front wheels is M14×1.5. The correct tightening torque is 160 Nm.

1. Put supports below the truck frame.
2. Align the hole pattern of the rim with the wheel shaft bolts and move the front wheel into the correct position.

Copyright © 2018 by MCFE. All rights reserved.

2. Slide the forks to the middle of the lifting carriage.

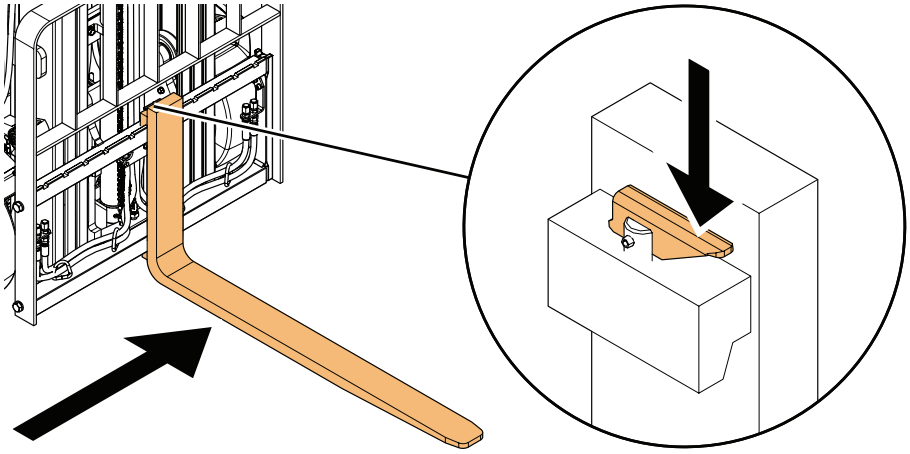

3. Remove the forks from the lifting carriage.

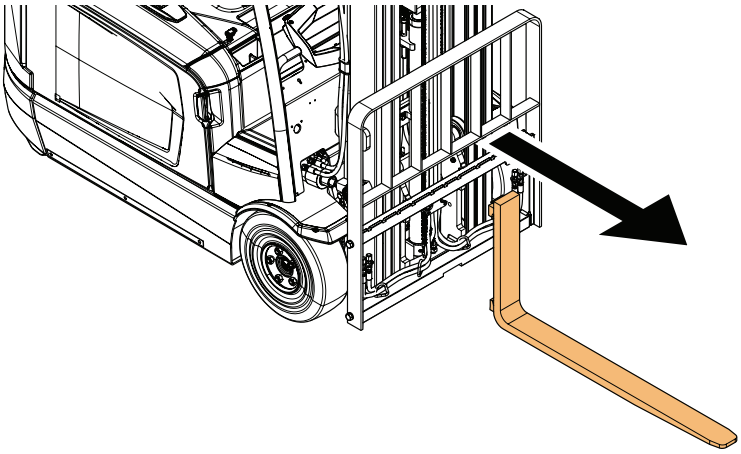

4. Lift the lifting carriage up with a lifting device.

NOTE: Make sure that you use applicable lifting devices and obey the safety instructions given by the lifting device manufacturer.

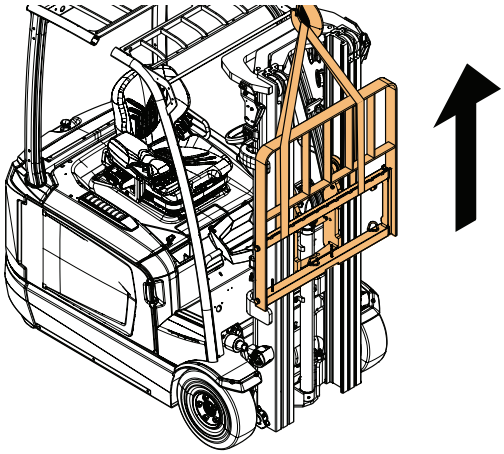

5. Remove the hydraulic connectors from the sides of the lifting carriage.

Copyright © 2018 by MCFE. All rights reserved.

9. Remove the hydraulic hoses.
10. Lay the mast down onto a pallet or a strong table.

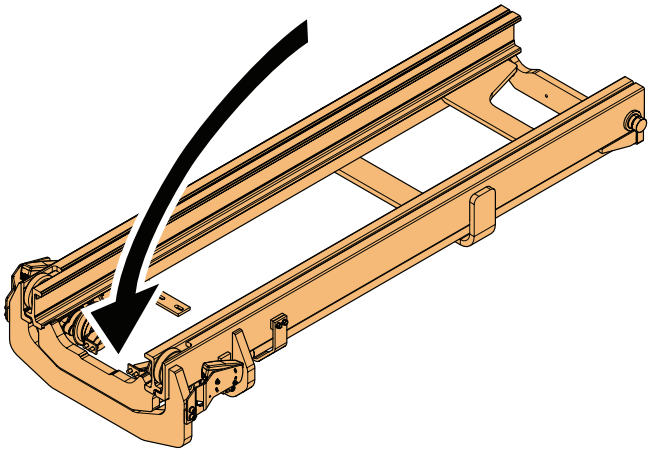

11. Remove the 2 screws that attach the working light to the mast.
12. Remove the working light.

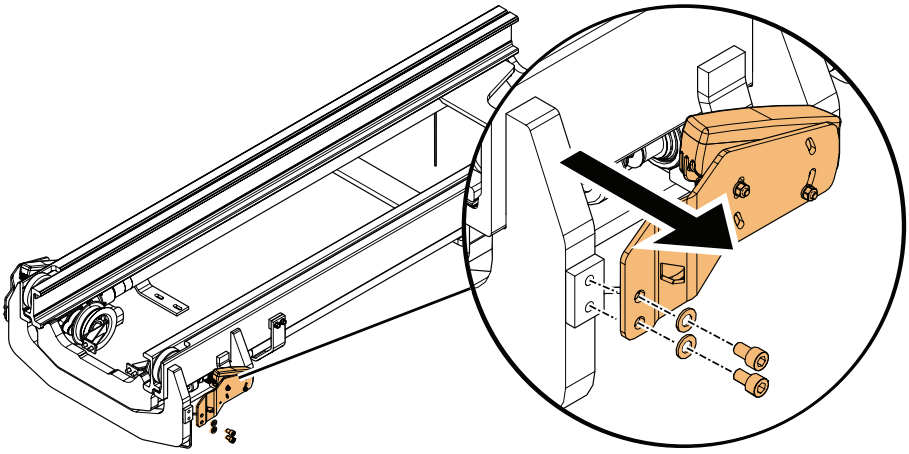

13. Remove the side cylinders, see *Section 5.14.1.15.1 Replace the side cylinders*.
14. Remove the 2 screws that hold the hose wheel holder in position.
15. Remove the hose wheel holder and the hose wheel.
16. Remove the circlip that attaches the hose wheel to the hose wheel holder.

Copyright © 2018 by MCFE. All rights reserved.

13. Lay the mast down onto a pallet or a strong table.

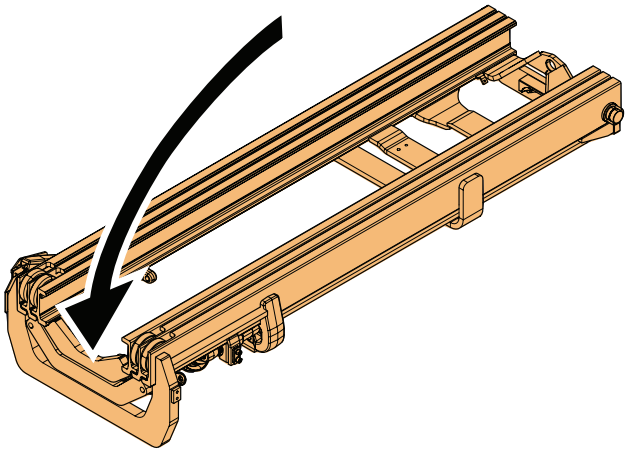

14. Remove the 2 screws that attach the working light to the mast.
15. Remove the working light.

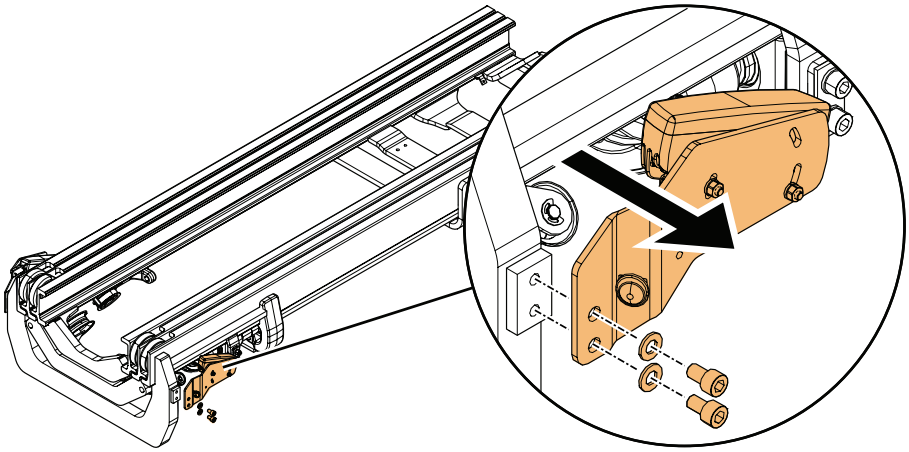

16. Remove the circlip that attaches the chain wheel to the chain wheel holder.
17. Remove the chain wheel from the chain wheel holder.

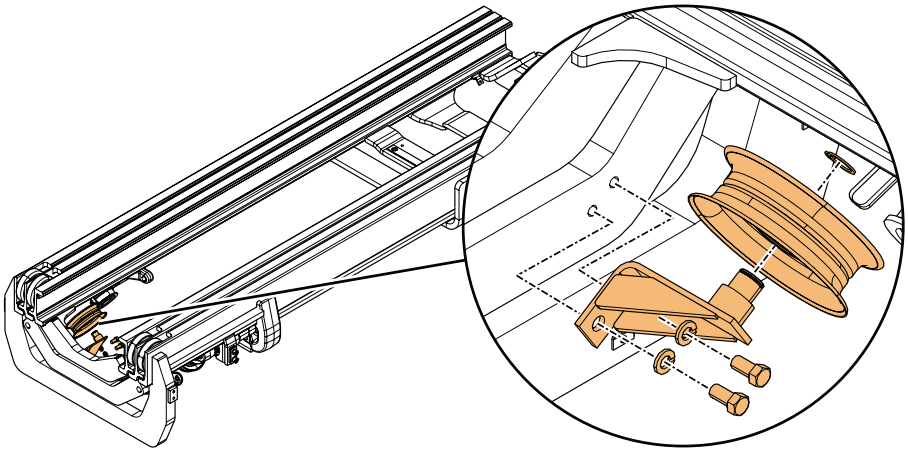

18. Remove the circlip that attaches the hose wheel to the second internal mast

Copyright © 2018 by MCFE. All rights reserved.

7. Check if the last chain pin you counted is approximately at the vertical line of the chain gauge. If the chain is approximately at that line, the length of the chain is right.

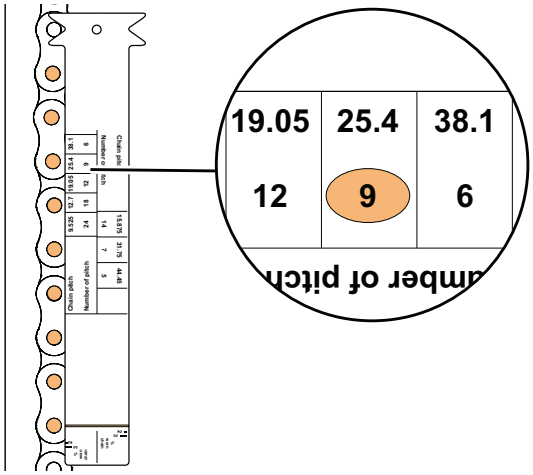

8. Make sure that the elongation is not more than 2%. If the elongation is more than 2%, you must replace the chain.

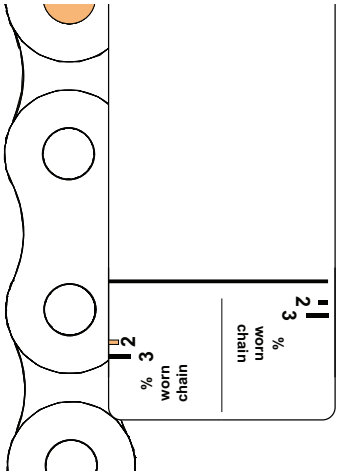

You can also measure the elongation without a chain gauge.

When a chain with the original length of 330.2 mm has elongated to the length of 336.8 mm, replace the chain (the elongation is approximately 2%).

Copyright © 2018 by MCFE. All rights reserved.

7. Attach the chain anchor to the other end of the chain.

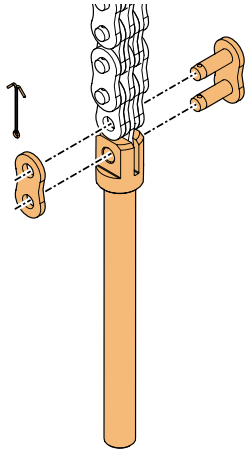

8. Install the bottom chain anchor to the mounting hole. The principle for correct chain routing is illustrated in *Figure 79: Principles of chain routing* below.
9. Install but do not tighten the 2 nuts to the chain anchor.

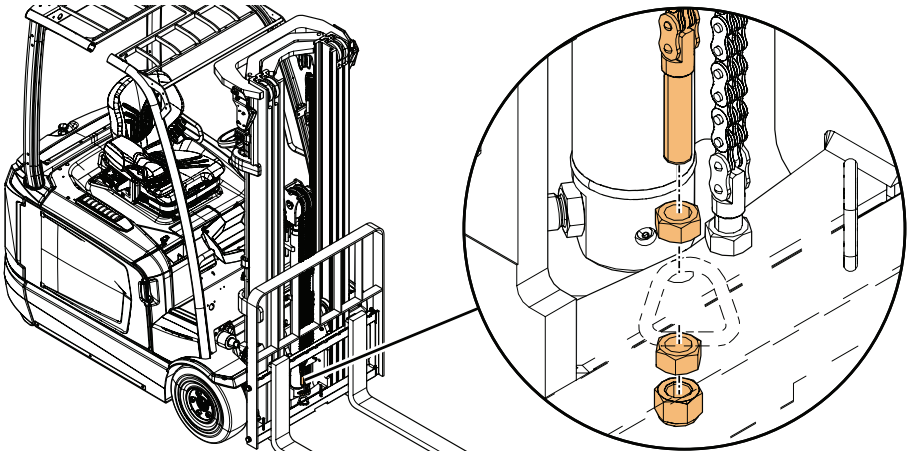

10. Adjust the chain tension according to the instructions provided in *Section 5.14.1.12.3 Adjust the mast chains*.

Copyright © 2018 by MCFE. All rights reserved.

6. Pull the internal masts out to extend the mast to its full height.

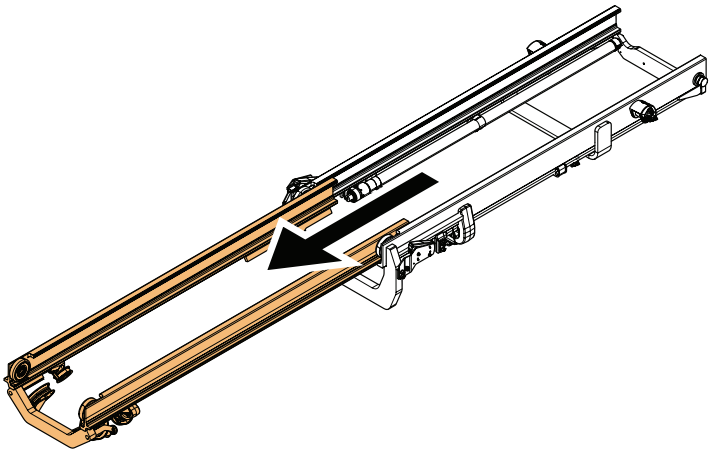

7. Remove the screw that attaches the side cylinder collar to the mast.

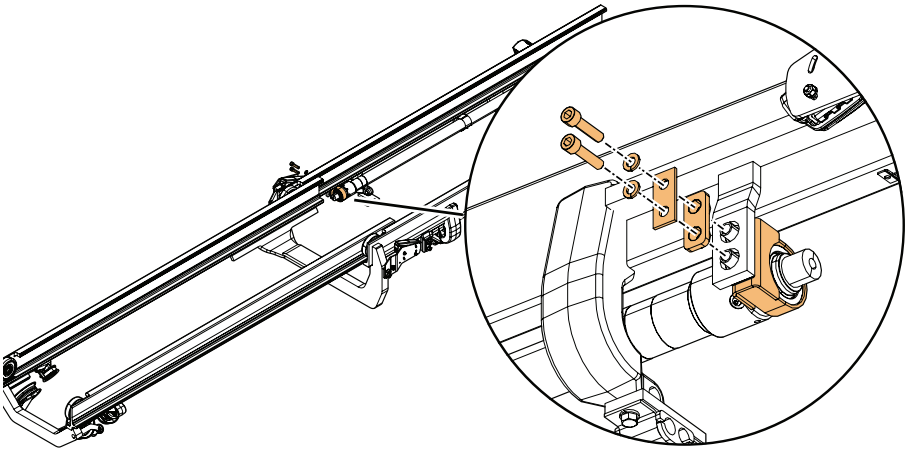

8. Remove the side cylinder piston.

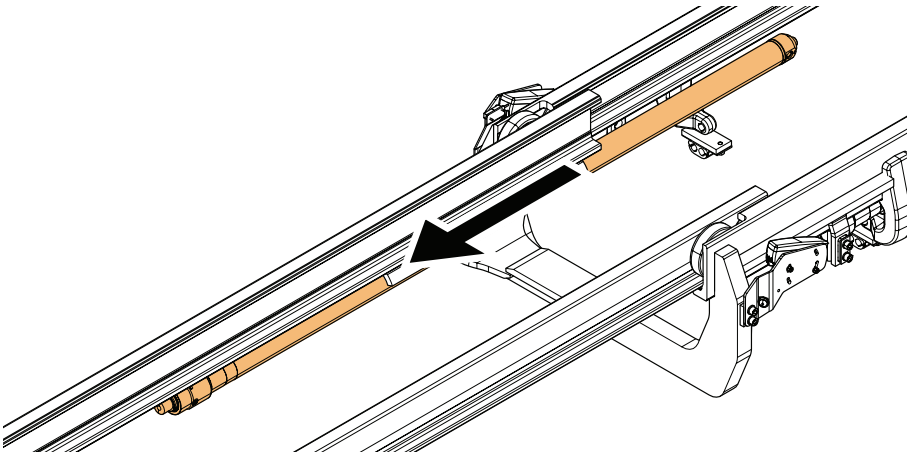

Copyright © 2018 by MCFE. All rights reserved.

CLICK HERE TO **DOWNLOAD** THE COMPLETE MANUAL

- Thank you very much for reading the preview of the manual.
- You can download the complete manual from: www.heydownloads.com by clicking the link below

- Please note: If there is no response to CLICKING the link, please download this PDF first and then click on it.

CLICK HERE TO **DOWNLOAD** THE COMPLETE MANUAL

5.16 Integrated sideshift carriage

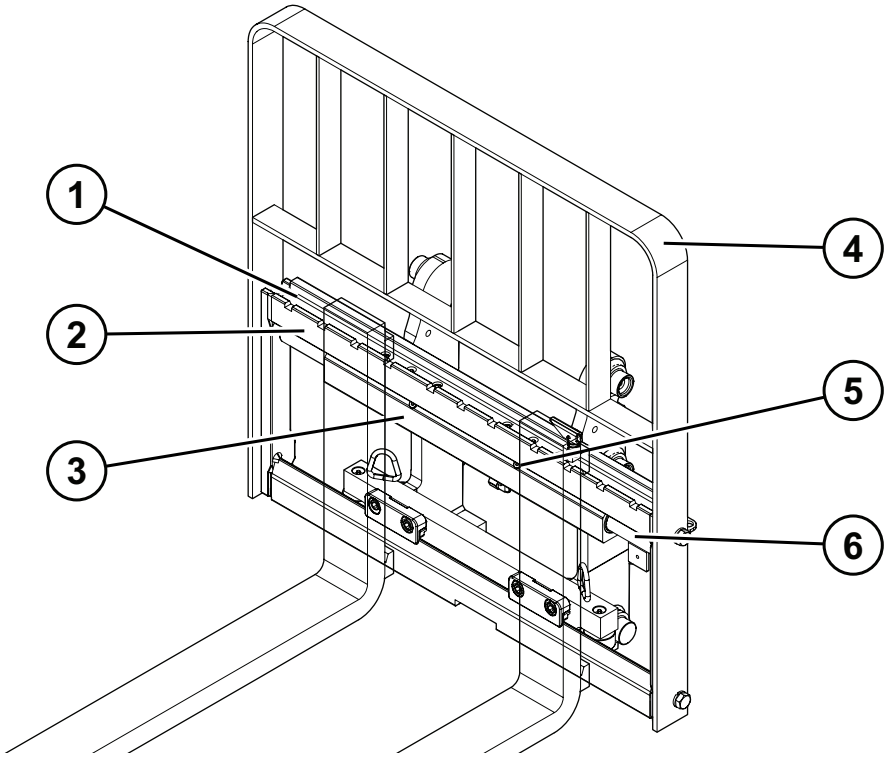

Figure 89: Integrated sideshift carriage

1. *Manufacturing date and identification code*
2. *FEM mobile frame*
3. *Fixed frame complete with sideshifting*
4. *Protection grid*
5. *Cap for bleeding air from circuit*
6. *Sideshifting cylinder*

5.16.1 Disassemble the protection grid

1. Support the grid with a lifting strap.

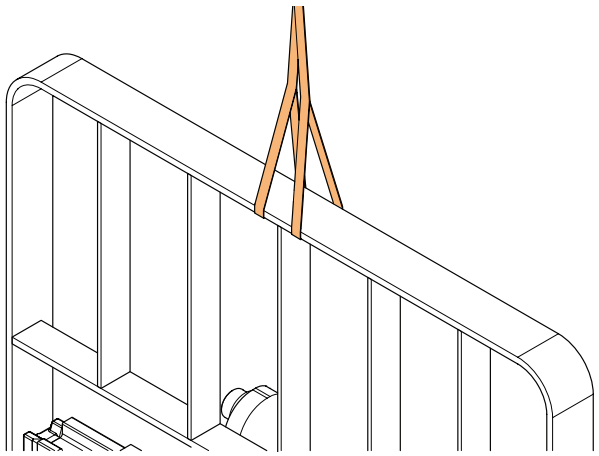

Copyright © 2018 by MCFE. All rights reserved.

5.17.4 Maintenance of the integrated fork positioner with sideshift

The equipment is delivered with guides and sliding blocks that are lubricated with good quality grease. Grease the sliding area of the lower supports tbefore you assemble the forks. Also, grease the bearings sliding area on the chrome bar.

The recommended lubricant is ISO X M2 (SHELL ALVANIA GREASE R2 or similar). If you use the equipment in a very dusty environment, it is recommended to use ISO 32 CB oil (ESSO NUTO 32 or similar).

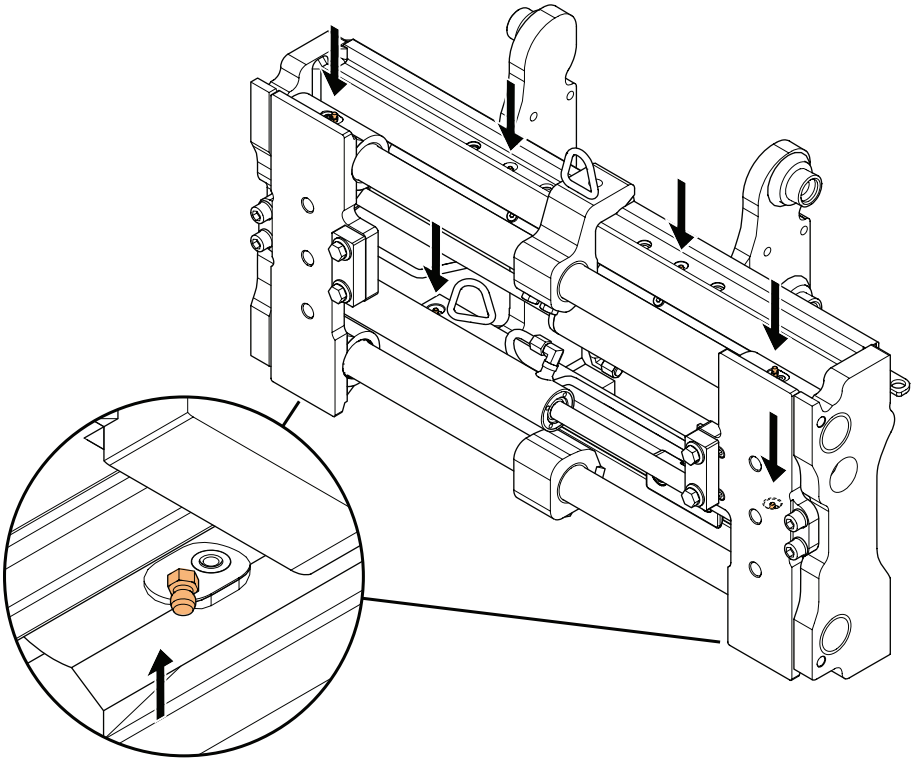

Figure 92: Grease points of the integrated fork positioner with sideshift

Maintenance work for every 1000 hours

- Examine the tightness of the grub screws. Use a 6 mm Allen key. If they are loose, clean the grubs and the holes with a solvent, let dry and screw on

Copyright © 2018 by MCFE. All rights reserved.

6. Clean the sliding block area and the bushings chamber.

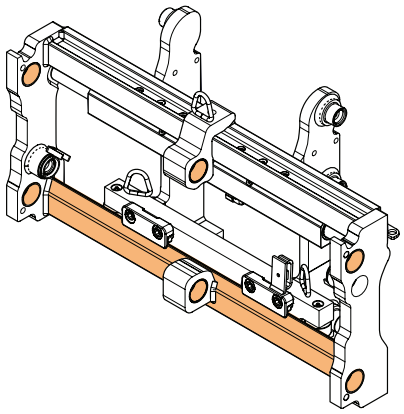

7. Replace the sliding blocks if they are worn.

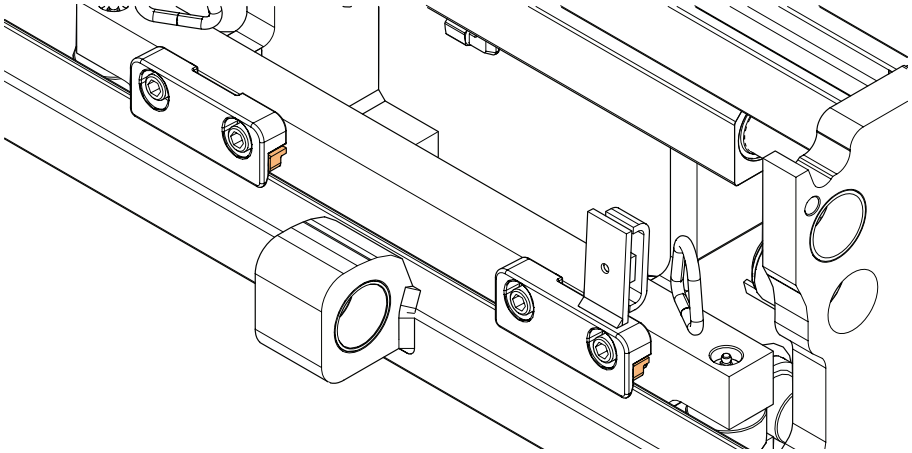

8. Grease the bushings chamber and the sliding block. Reassemble by doing the steps in a reversed order.
9. Make sure you assemble both left and right supports correctly.
10. Tighten the screws with Loctite 270 threadlocker.
11. Center the attachment hole of the chromed bar.
12. Assemble the forks. See *Section 5.17.3 Assemble the forks*.

5.17.12 Replace the gaskets of the fork-moving cylinder

To disassemble and replace the gasket, see the procedure *Section 5.17.6 Disassemble the right fork shifting cylinder*. The procedure is the same for the left and the right cylinder.

Copyright © 2018 by MCFE. All rights reserved.

5.18.1.4 Replace the weight adjustment handle

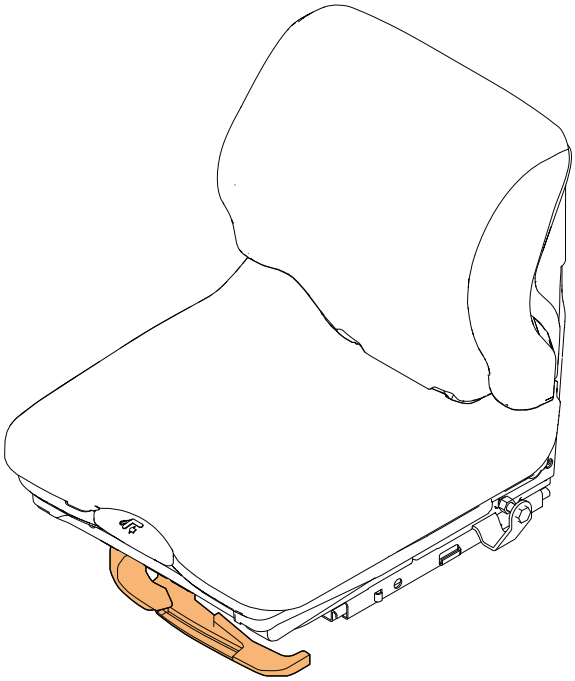

Figure 102: Weight adjustment handle overview

1. Remove the operator's seat from the truck, see *Section 5.18.1.1 Remove the operator's seat from the truck*.
2. Remove the seat base, see *Section 5.18.2.4 Remove the seat base*.
3. Loosen the weight adjustment spring attached to the backrest.

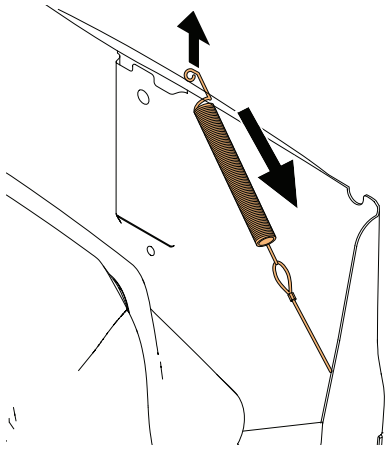

4. Remove the pop rivet from the handle.
5. Remove the pop rivet from the plastic attachment plate.

Copyright © 2018 by MCFE. All rights reserved.

3. Make sure that the security bolt goes into the hole in the bottom of the operator's seat.

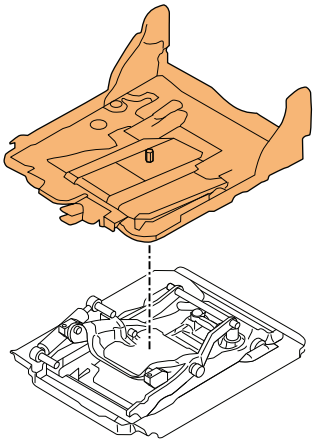

4. Install the 2 screws on top of the seat base.
5. Tighten the security bolt on top of the seat base.

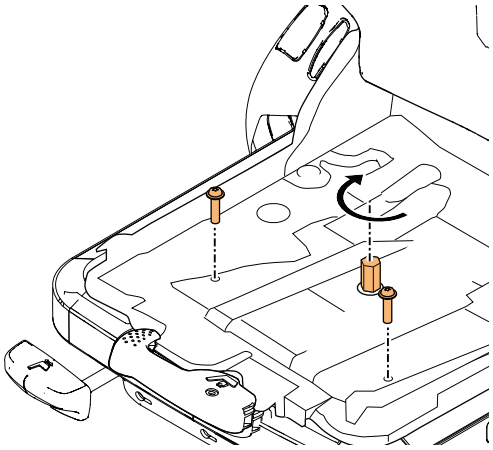

6. Remove the security bolt.
7. Install the seat padding.
8. Install the operator's seat to the truck, see section *Section 5.18.2.1 Remove the operator's seat from the truck*.

Copyright © 2018 by MCFE. All rights reserved.

4. Push the operator's seat from the front and turn it clockwise to remove the seat base.

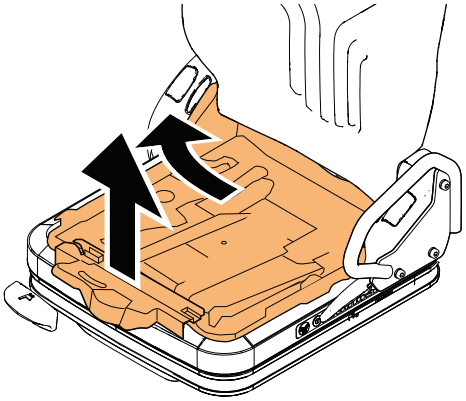

To install the seat base, do the steps in the opposite order.

5.18.3.4 Replace the seat belt

For instructions on how to replace the seat belt, see section *Section 5.18.2.6 Replace the seat belt*.

5.18.3.5 Replace the seat switch

For instructions on how to replace the seat switch, see section *Section 5.18.2.7 Replace the seat switch*.

5.18.3.6 Replace the weight adjustment handle

1. Remove the weight adjustment handle from the mounting bracket.

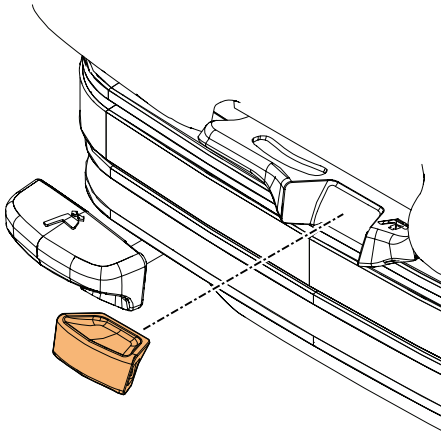

To install the weight adjustment handle, do the steps in the opposite order.

5.18.3.7 Replace the gas spring

For instructions on how to replace the gas spring, see section *Section 5.18.2.10 Replace the gas spring*.

Copyright © 2018 by MCFE. All rights reserved.

4. Pull out the handle bar.

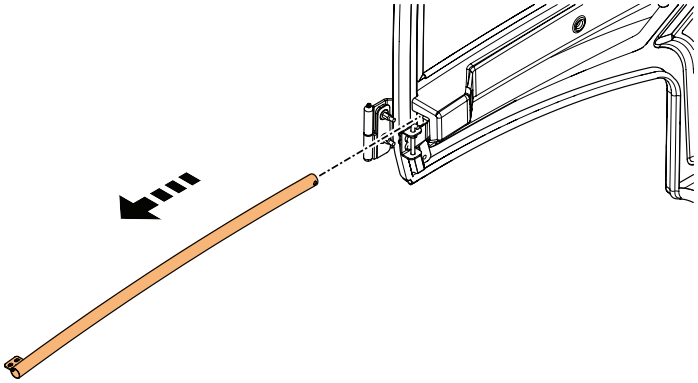

To install the opening handle of the operator door, do the steps in the opposite order.

5.21.1.3 Remove the cover plate of the operator door

1. Open the operator door, see *Section 5.21.1.1 Open the operator door*.
2. Remove the opening handle, see *Section 5.21.1.2 Remove the opening handle of the operator door*.
3. Remove the screws of the cover plate.

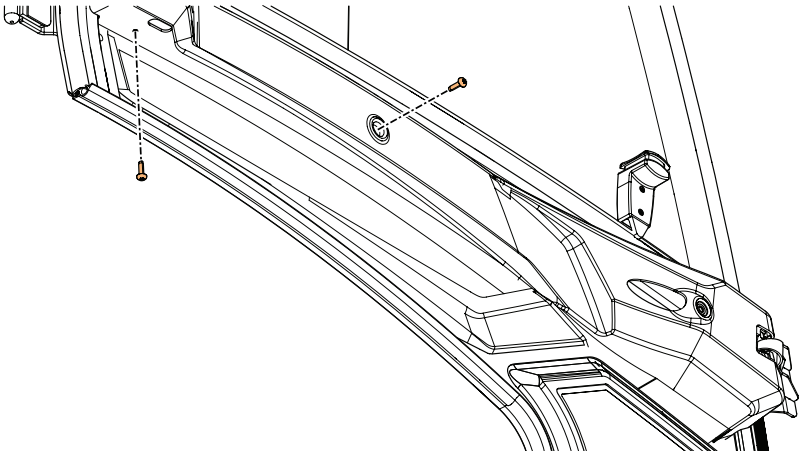

Copyright © 2018 by MCFE. All rights reserved.

2. Remove the upper screw of the gas spring.

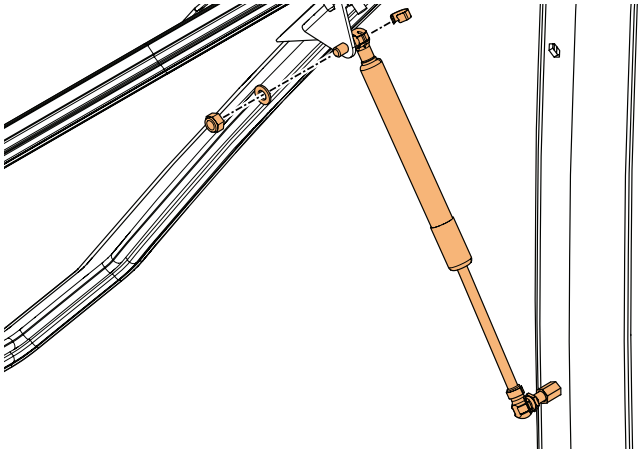

3. Remove the lower screw of the gas spring.
4. Remove the gas spring.

To install the gas spring, repeat the steps in the opposite order.

5.21.4.3 Remove the rear window

1. Open the rear window, see *Section 5.21.4 Rear window*.
2. Remove the gas spring *Section 5.21.4.2 Replace the gas spring of the rear window*.
3. Remove the rear window with the hinges.

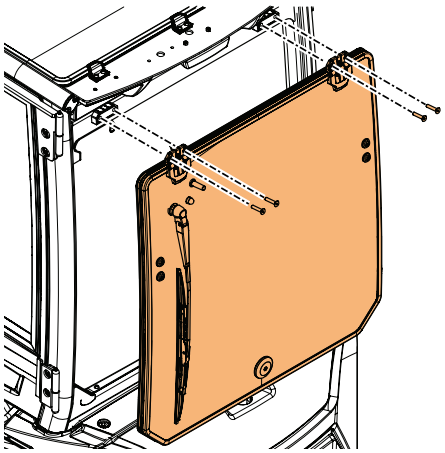

Copyright © 2018 by MCFE. All rights reserved.

5.21.9 Reading light

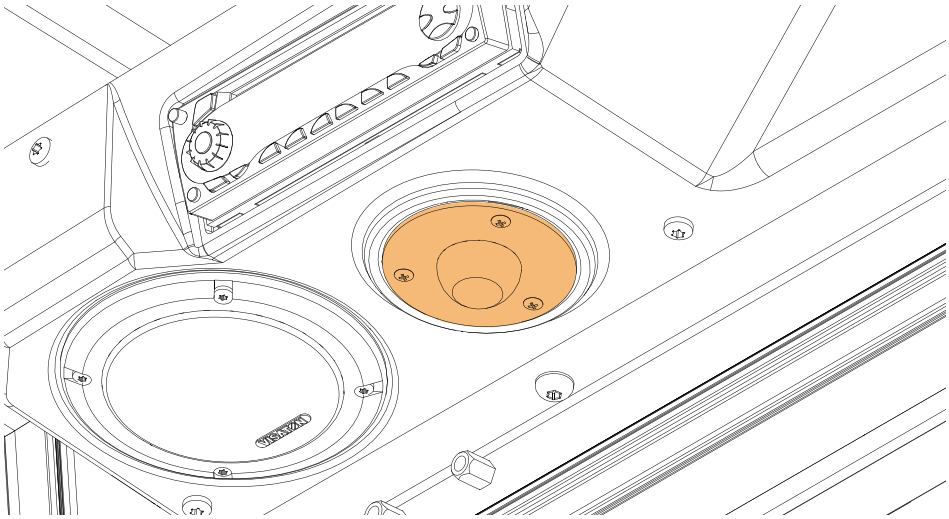

Figure 123: Reading light overview

5.21.9.1 Remove the reading light

To remove the reading light:

1. Remove the screws from the attachment plate of the reading light.
2. Remove the reading light.

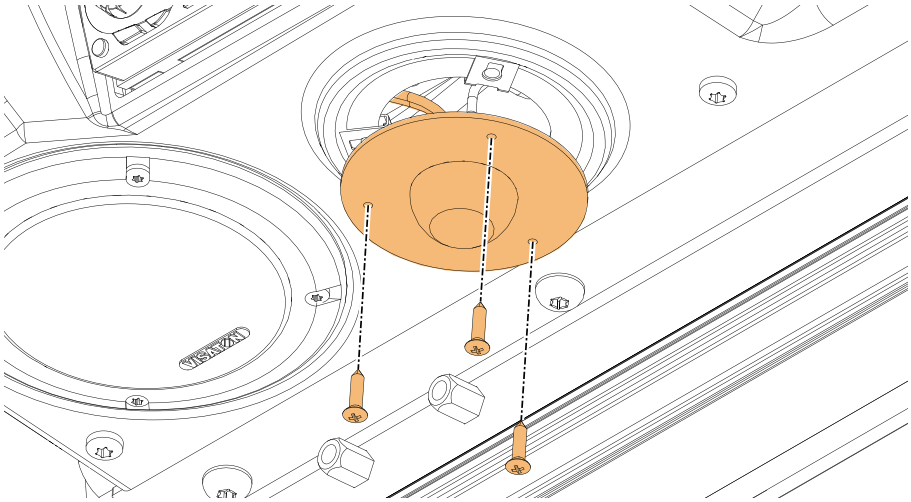

3. Disconnect the connector.

5.21.10 Heater

The heater can be installed to the side panel of a cabin truck.

Copyright © 2018 by MCFE. All rights reserved.

7.2 Safety with lead-acid batteries

	Read the operating instructions of the battery and keep them near the battery. Only skilled personnel can do work on batteries.
	Use protective glasses and clothes when you work on batteries. Pay attention to the accident prevention rules as well as the standards EN 62485-3 and EN 50110-1.
	No smoking! Do not expose batteries to naked flames, glowing embers or sparks, because it can cause the battery to explode.
	Acid splashes in the eyes or on the skin must be washed immediately with water. In case of an accident, consult a doctor immediately! Clothing contaminated by acid must be washed with water.
	Risk of explosion and fire, avoid short circuits! Metal parts of the battery are always live. Do not place tools or other metal objects on the battery!
	Electrolyte is highly corrosive.
	Batteries and cells are heavy. Ensure secure installation. Use only suitable handling equipment, for example lifting gear in accordance with the standard VDI 3616.
	Dangerous electrical voltage!
	Pay attention to the hazards that can be caused by batteries.

7.3 Battery maintenance

These maintenance instructions applies only to open lead-acid batteries.
Consult the battery supplier for instructions for other types of batteries.

Copyright © 2018 by MCFE. All rights reserved.

7. Insert a new battery to the truck.
8. Connect the battery connector.
9. Guide the battery cable.

   Make sure the cable does not get stuck or compressed anywhere.

10. Close the battery locking device.

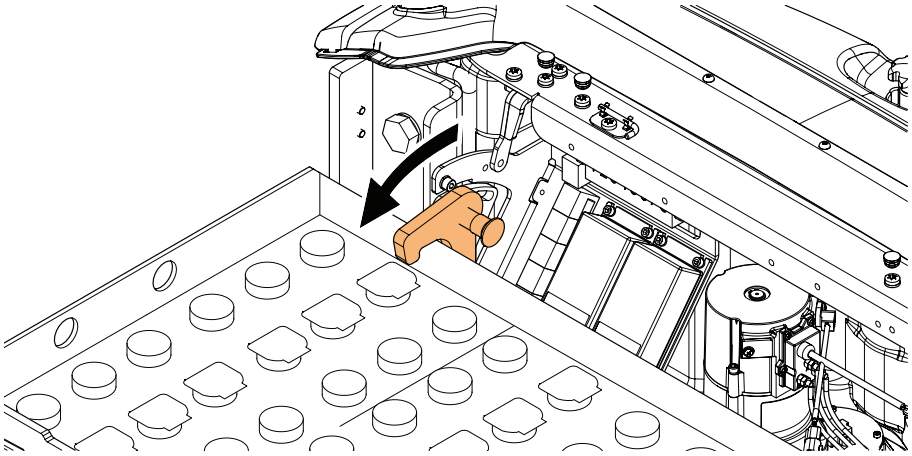

11. Close the battery door.
12. Close the battery cover.

7.7.2 Battery sideway exchange

If you have a truck with the battery sideway exchange, you must have the battery tray or the roller bed to replace the battery, see *Figure 132: Battery tray and battery roller bed*. You can also use the battery sideway exchange tools to replace the battery, see *Section 14.16 Battery sideway exchange tools*.

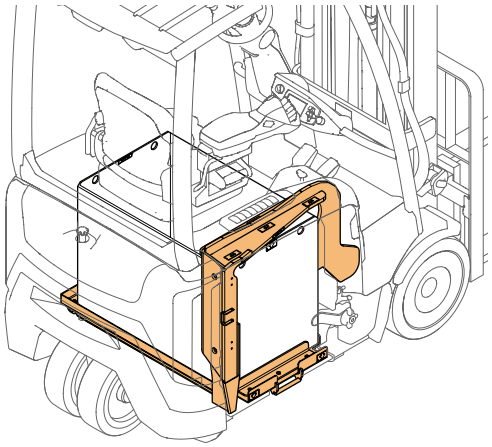

Figure 131: Battery sideway exchange chassis

Copyright © 2018 by MCFE. All rights reserved.

Circuit diagram identifier	Software identifier	Physi-cal pin number	Physical range	Function
Tilt A	CPOT7	5	0.5-4.5V	Mast tilt angle sensor
Pressure sensor	CPOT8	6	0-10 V	Pressure sensor to measure hydraulic pressure at the free-lift area for load weight scale
+48V	POWER IN2	7	48V	+BATT input for the valves
48V	PEV2	8	48V	FREE
Encoder2 Ch A	ENCB CHA	9	encoder	FREE
Encoder2 Ch B	ENCB CHB	10	encoder	FREE
MC valves Attach 1	CPOT9	11	0/5V	MC valves attach 1 input
MC valves Attach 2	CPOT10	12	0/5V	MC valves attach 2 input
Seat switch	DI8	13	0/48V	Seat switch
Forward	DI9	14	0/12V	F-N-R switch forward
Lift lock	NEV3	15	0/48V	Lowering lock valve to add redundancy to lowering (FC) or disable the lowering when no power present (MC)
+5V	PPOT3	16	+5V / 500 mA	+5V supply for multipurpose input 4
A	ENCA CHA	17	0/12V	Mast height sensor channel A
B	ECNA CHB	18	0/12V	Mast height sensor channel B
0V	NENC	19	GND	0V supply for sensors
0V	-BATT	20	-BATT	0V supply for VCM and valves
Neutral	DI10	21	0/12V	F-N-R switch neutral
Backward	DI11	22	0/12V	F-N-R switch backward
Magnetic brakes	NEVP9	23	0/48V	Multipurpose output 1

8.2.4 Traction controller

This forklift truck has two ACE-2 Controllers, which are designed to control 4.0 kW to 9.0 kW motors.

The controller performs these functions:

- Controller for AC asynchronous 3-phase motors
- Regenerative braking functions
- 2 CAN bus interfaces
- Flash memory (128 Kbytes on-chip program memory)

Copyright © 2018 by MCFE. All rights reserved.

2. Disconnect the hydraulic hoses.

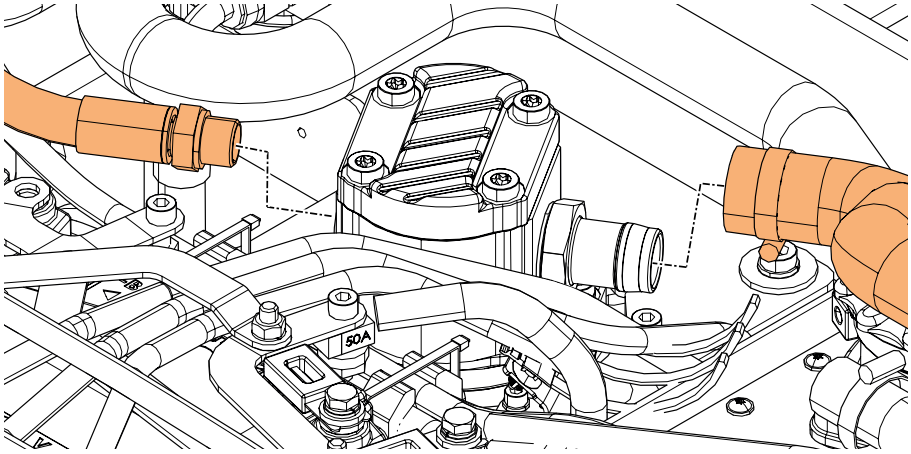

3. Disconnect the power cables of the pump motor from the electric panel.
4. Remove the four bolts that attach the pump motor bed to the truck.

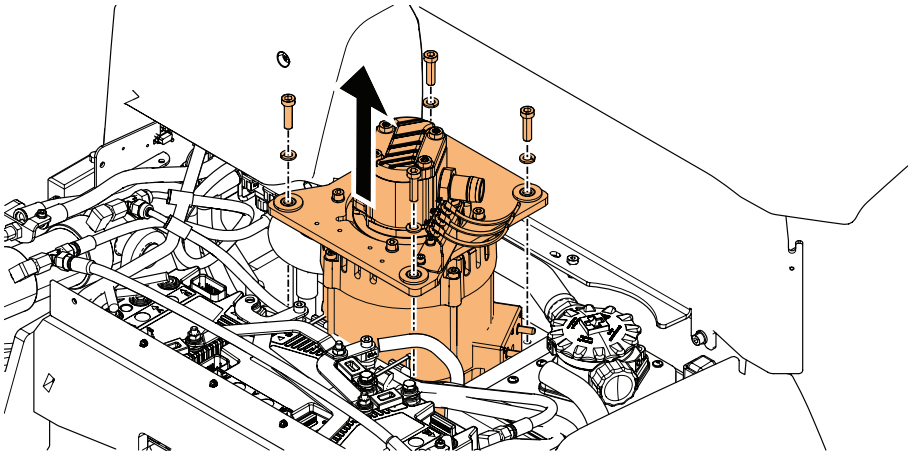

5. Remove the 2 bolts and the pump.

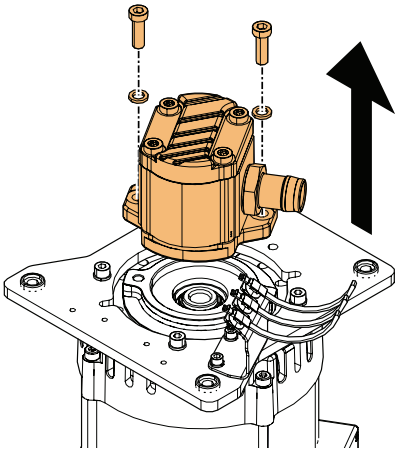

Copyright © 2018 by MCFE. All rights reserved.

2. Disconnect the sensor connector.

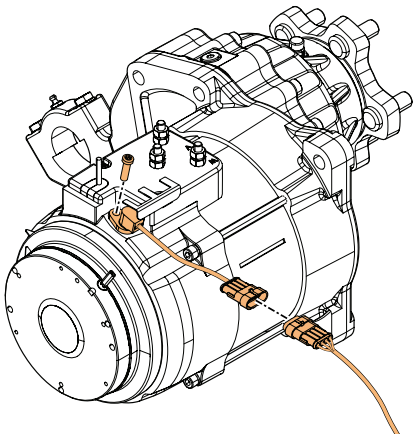

3. Remove the motor rotation sensor.

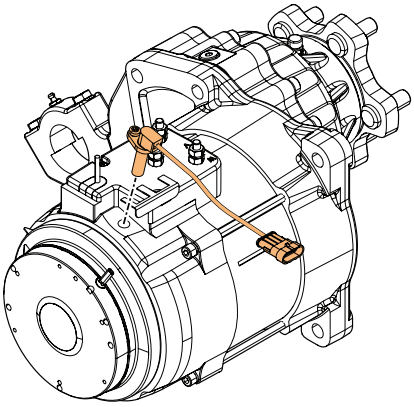

4. Install the new motor rotation sensor.
5. Connect the wires to the sensor connector.
6. Connect the sensor connector.
7. Install and tighten the screw.

8.6.2 Steering motor sensors

8.6.2.1 Temperature sensor

Type	PTC resistor
Switching output	Variable resistance based on temperature
Electrical wiring	2 wires: red and white. No polarity

8.6.2.2 Rotation sensor

The 3-wheel truck has one, and the 4-wheel truck two rotational sensors at the steering motor. The sensors are of same type.

Copyright © 2018 by MCFE. All rights reserved.

2. If necessary, measure the output against the 0 V.
3. Turn the steering wheel.
4. Measure the channels individually with a multimeter.

   When you use 2 multimeters, you should be able to measure clear 1 and 0 from the output, with a 90º phase difference. The measured voltage should fluctuate between +3...5 volt and 0.

8.6.8 Accelerator pedal sensor

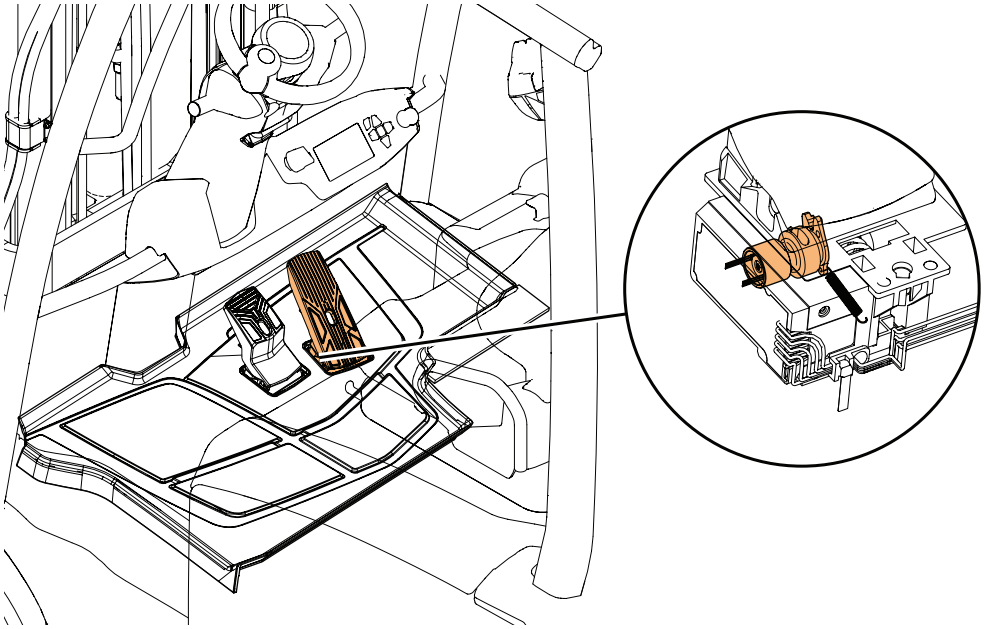

Figure 156: Accelerator pedal sensor overview

Type	Redundant angle sensor
V_s	4.5-5.5 Vdc
Output signal	0.5-4.5 V, ratiometric, crossed signal curves
Electrical wiring	1 and 4 = supply, 3 = OUT1 (Output signal 1), 6 = OUT2 (Output signal 2), 1 and 5 = 0 V
Sensing range	15º
Equipment identification	B21

The accelerator pedal sensor has 2 analogue output signal that are crossed together. The output signal varies between 0.5-4.5 Vdc, depending on the pedal operating angle, which is 15°. The accelerator pedal is of type redundant, HALL-effect angle sensor.

NOTE: You cannot change the accelerator pedal sensor.

Copyright © 2018 by MCFE. All rights reserved.

Current	1 A
Electrical wiring	1. Neutral (XA4B/21), connector X8/ 2. XX16/J32 3. Forward (XA4B/14), connector X8/ 4. XX16/J32 5. Reverse (XA4B/22), connector X8/

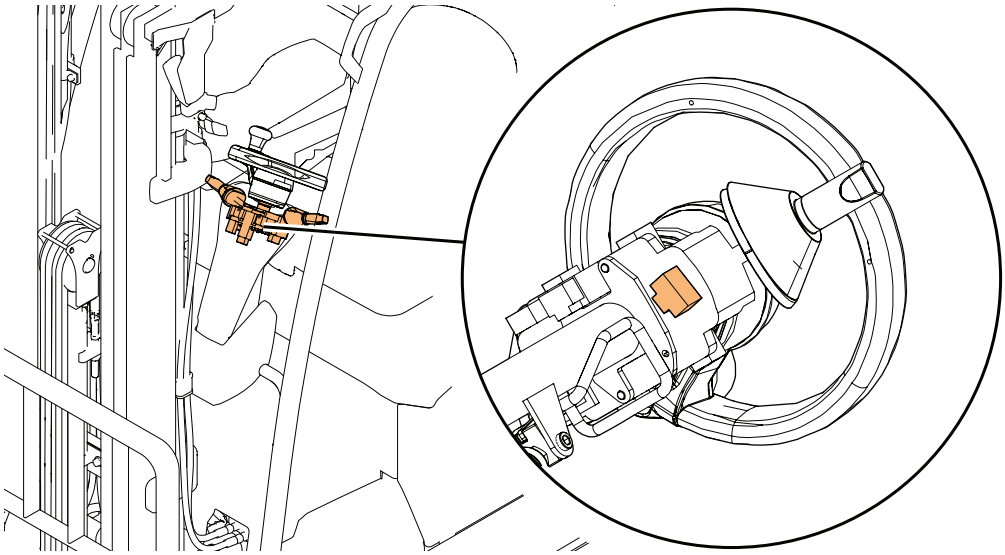

Figure 167: Driving direction selection switch

8.6.17.1 Functionality check of the driving direction selection switch

Neutral position:

1. Measure at the resistance area that the contacts in the driving selection switch neutral position are not stuck together. Connect the multimeter between pins X8/1 and X8/4.

   When the switch is in *neutral position, the contacts are closed, and the resistance is ~0 Ω.*When the switch is anything else than neutral, the resistance between the pins is ~∞Ω.

2. If the contacts are stuck together or broken, replace the driving direction selection switch.

Copyright © 2018 by MCFE. All rights reserved.

SYMBOL	DESCRIPTION
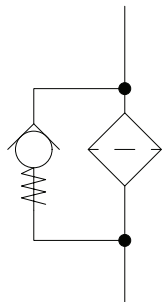	Return filter with a bypass valve
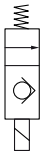	Solenoid valve
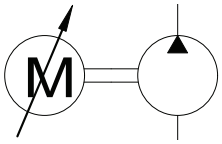	Electric motor and hydraulic pump
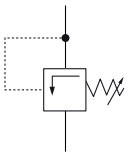	Adjustable pressure relief valve
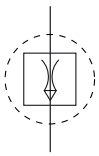	Hydraulic oil flow choker
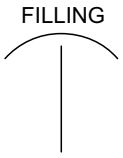	Hydraulic oil tank filling plug
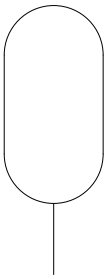	Hydraulic accumulator

Copyright © 2018 by MCFE. All rights reserved.

2. Remove the screws from the top plate.

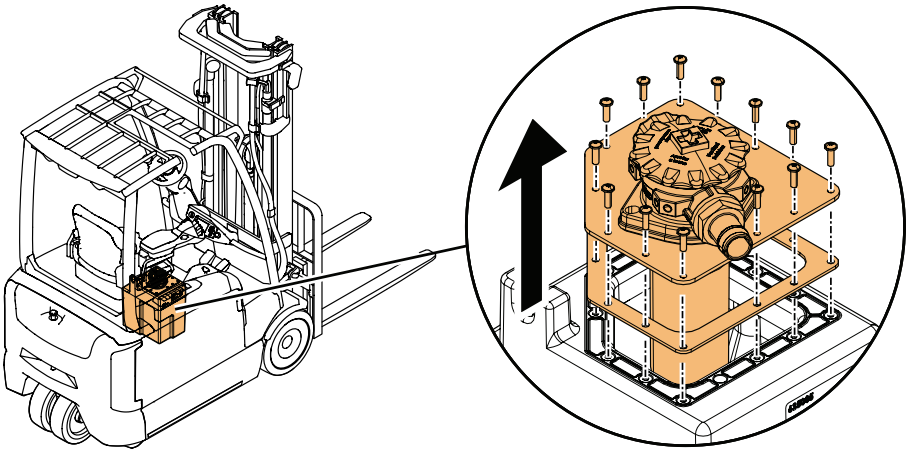

3. Remove the top plate.
4. Remove the top seal.
5. Clean the oil tank.
6. Clean the top seal and add adhesive/sealing compound (Super Silicone RTV Black, 08933211) on both sides of the top seal.

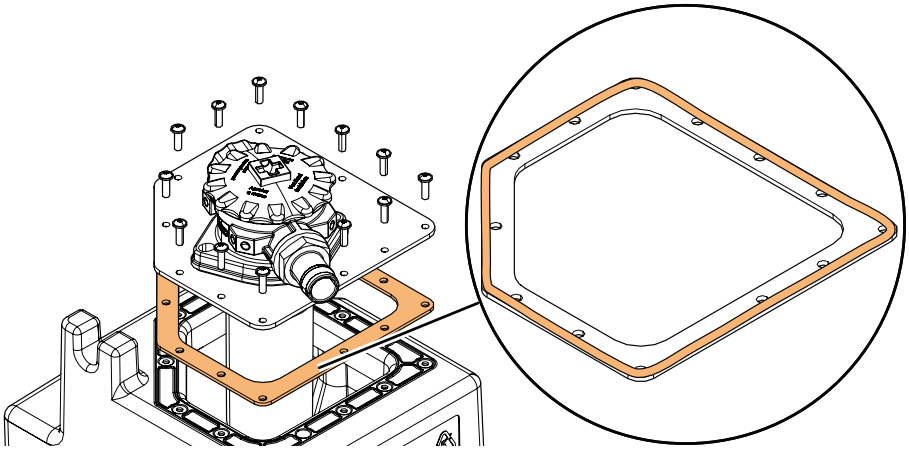

7. Install the top seal.
8. Attach the top plate to the oil tank with the screws and tighten to max 4 Nm.

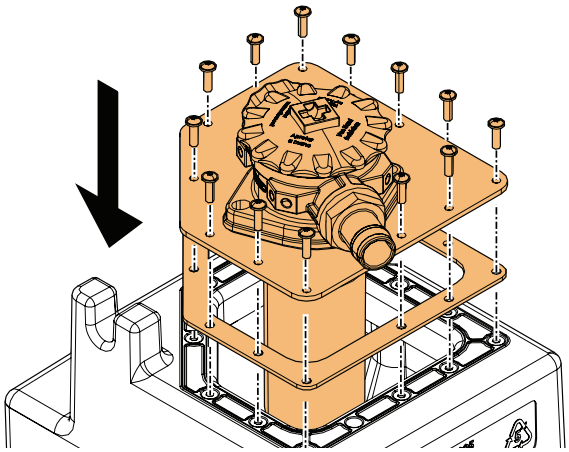

Copyright © 2018 by MCFE. All rights reserved.

13 Service data

13.1 Special tightening torques

Front wheel	230 Nm
Rear wheel. 3–wheel models	230 Nm
Rear wheel, 4–wheel models	160 Nm
Traction controller terminal bolts	13-15 Nm
Traction motor power terminals	8 Nm

13.2 Tightening torques for standard bolts and nuts

		8.8		10.9		12.9	
Bolt size	**Pitch [mm]**	**Nm**	**kg-m**	**Nm**	**kg-m**	**Nm**	**kg-m**
M4	0.70	2.8	0.3	4.1	0.4	4.8	0.5
M5	0.80	5.5	0.6	8.1	0.8	9.5	1.0
M6	1.00	9.5	1.0	14	1.4	16.5	1.7
M7	1.00	15	1.5	23	2.3	28	2.9
M8	1.25	23	2.3	34	3.5	40	4.1
	1.00	24	2.4	36	3.7	43	4.4
M10	1.50	46	4.7	68	6.9	79	8.1
	1.00	52	5.3	76	7.7	89	9.1
	1.25	49	5.0	72	7.3	84	8.6
M12	1.75	79	8.1	115	11.7	135	13.8
	1.25	87	8.9	125	12.7	150	15.3
	1.50	83	8.5	120	12.2	145	14.8
M14	1.75	125	12.7	185	18.9	215	21.9
	1.50	135	13.8	200	20.4	235	24.0
M16	2.00	195	19.9	280	28.6	330	33.7
	1.50	205	20.9	300	30.6	360	36.7
M18	2.50	280	28.6	390	39.8	460	46.9
	1.50	310	31.6	440	44.9	520	53.0
	2.00	290	29.6	420	42.8	490	50.0
M20	2.50	390	39.8	560	57.1	650	66.3

Copyright © 2018 by MCFE. All rights reserved.

Figure	Description	Part number
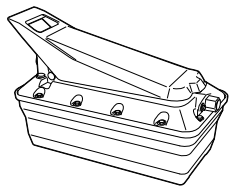	Pump	623970
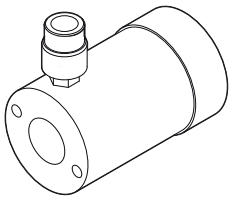	Pressure cylinder	623968
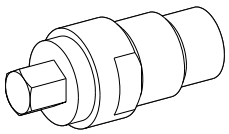	Wheel bolt tool	623971
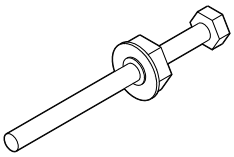	Motor shaft rotation tool	623972

13.6 Troubleshooting

CAUTION

Only adequately trained truck operators and service personnel can carry out the daily and weekly check-ups.

Only trained service personnel can carry out other maintenance operations.

The terms of the warranty prescribe appropriate maintenance of the truck. Use original spare parts.

When you start troubleshooting, always look at the truck display messages first. Obey the instructions. See the examples in *Table 41: Troubleshooting case examples*.

Before you contact the service personnel:

- Make sure that the battery is fully charged (low battery voltage can cause error messages)
- Restart the truck (some error messages can be cleared after the restart)

Copyright © 2018 by MCFE. All rights reserved.

14.4 Smart backup alarm

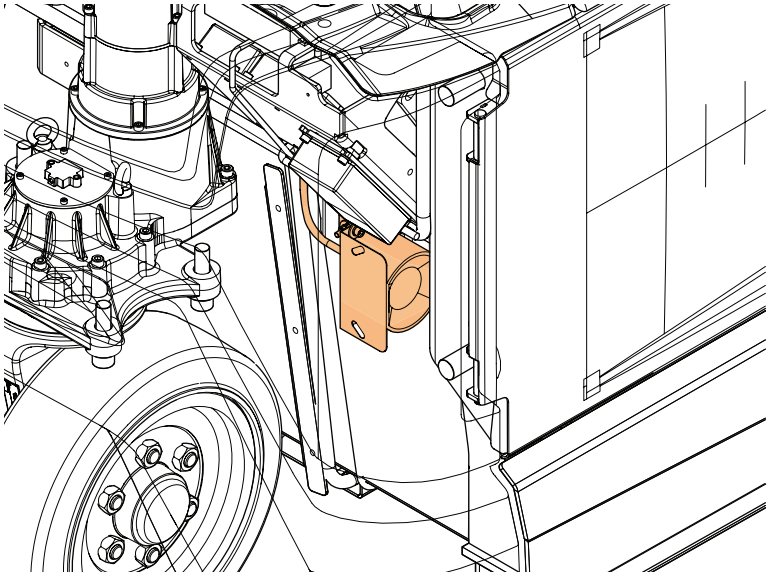

Figure 193: Smart backup alarm overview

The smart backup alarm warns people around the truck when the truck reverses. The sound level of the alarm can be adjusted in the range of 82-102 dB.

NOTE:
You need to insert an additional relay and connect the smart backup alarm wiring to XH50/ connector.

To install the smart backup alarm:

1. Install a corner bracket to the smart backup alarm with 2 screws and nuts.

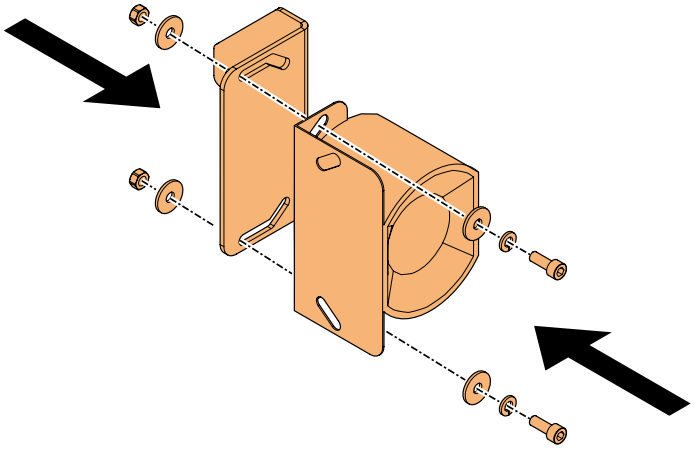

Copyright © 2018 by MCFE. All rights reserved.

2. Connect the wiring.

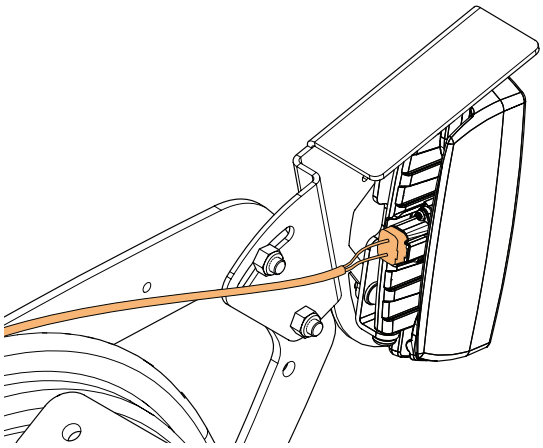

14.8 Blue point rear light

The blue point rear light is used to help people notice a moving truck and decrease the risk of collisions between people and trucks. The blue point rear light directs a focused beam of blue light to the ground behind the truck. The blue point rear light is connected in parallel with the rear light.

The blue point rear light can be installed under the overhead guard with a separate mounting plate, see *Section 14.8.1 Install the blue point rear light under the overhead guard*.

14.8.1 Install the blue point rear light under the overhead guard

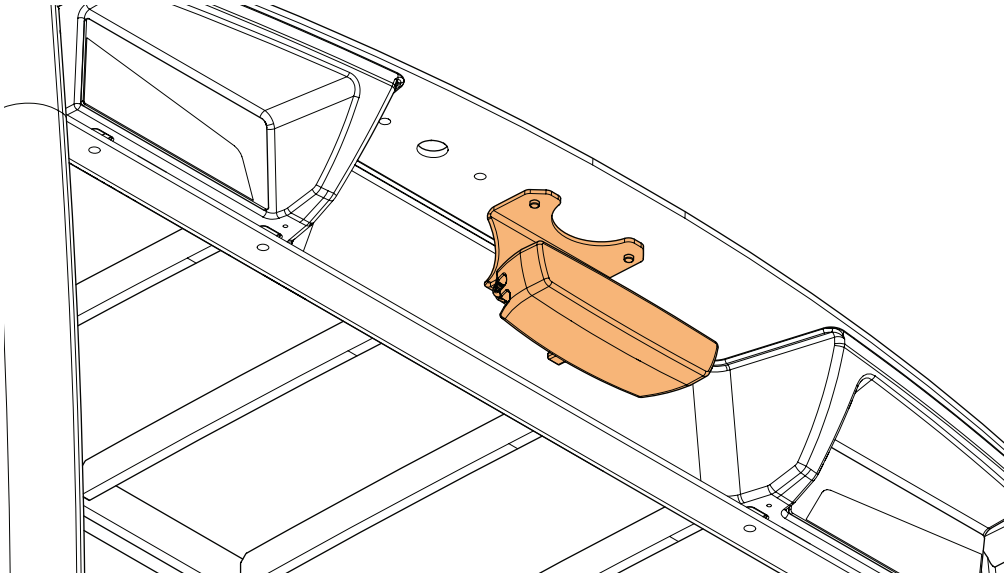

Figure 202: Blue point rear light overview

Copyright © 2018 by MCFE. All rights reserved.

14.13 Load weight indicator

WARNING

Do not exceed the maximum loading capacity of the truck under any circumstances. Risk of overturning!

CAUTION

Always obey the maximum values for load weight and load center information on the capacity plate. Do not overload!

The load weight indicator option indicates the load weight on the truck display. The accuracy of the scale is +/-50 kg. The load weight indicator is shown in the middle of the center information area.

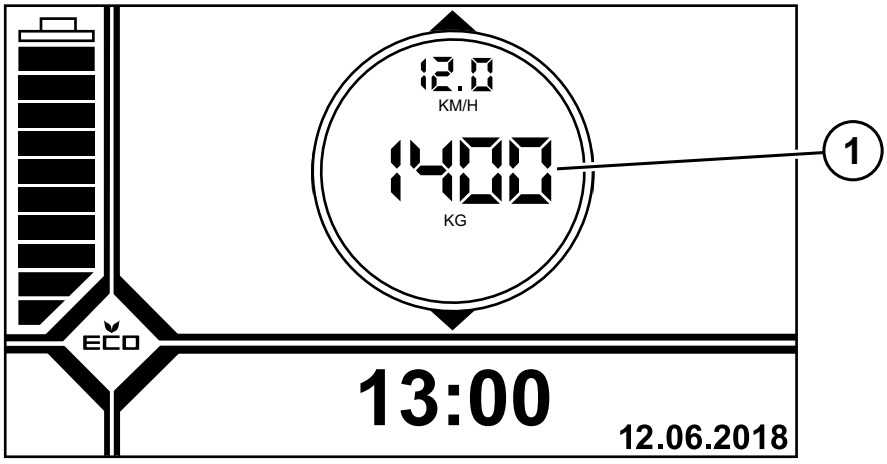

Figure 209: Load weight indicator

1. *Load weight indicator*

For more information, see the section *Pressure sensor* in the Service Manual.

14.14 Operator's seat options and accessories

These accessories are available for the operator's seats:

- Left arm rest (MSG20, MSG65)
- Backrest extension (MSG65)

Copyright © 2018 by MCFE. All rights reserved.

7. Lower the forks of the power pallet truck so that the wheels of the battery tray touch the floor of the battery compartment.

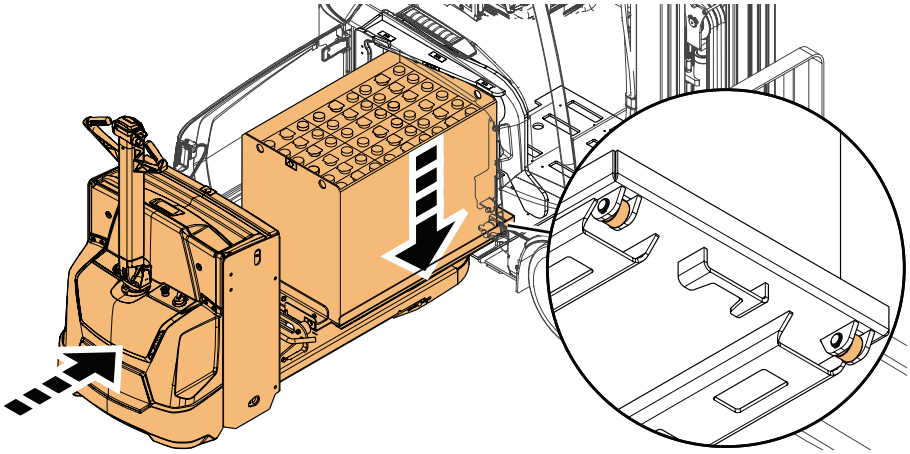

8. With the power pallet truck, push the battery inside the battery compartment.

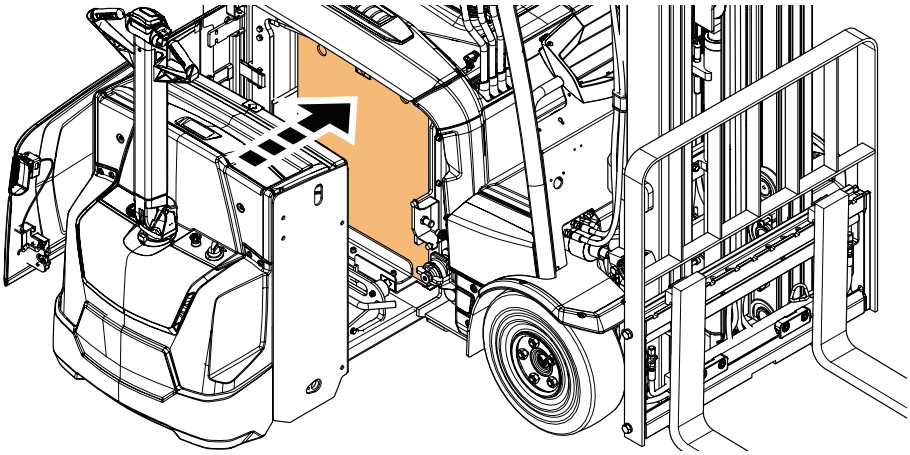

9. Lower the forks of the power pallet truck slightly.

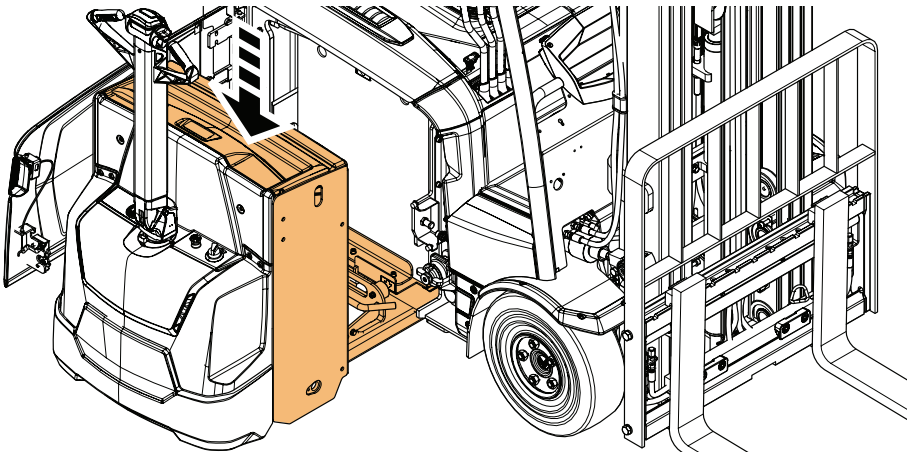

Copyright © 2018 by MCFE. All rights reserved.

15 Technical specifications

15.1 Dimensions

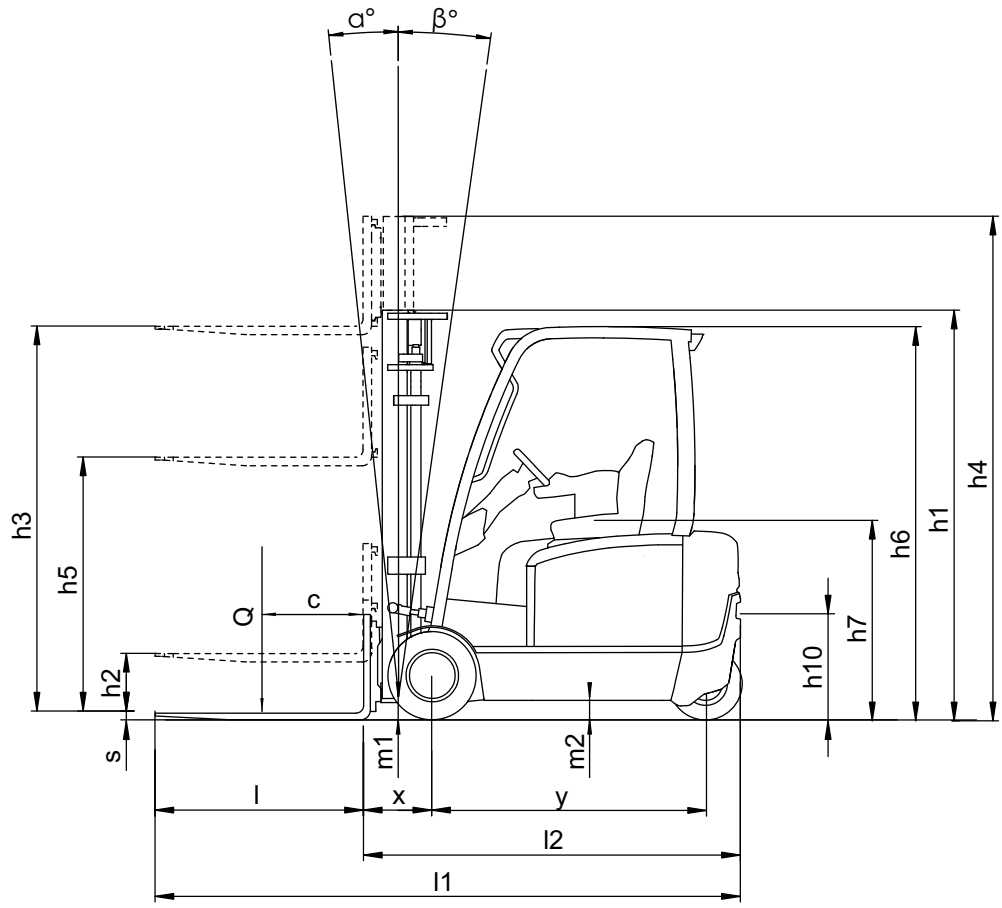

Figure 220: 3–wheel model, side

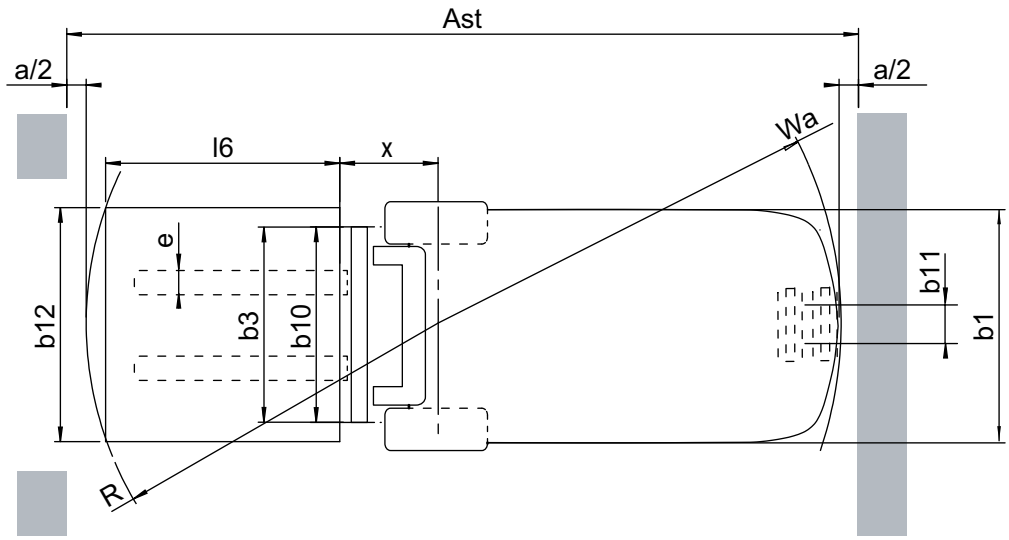

Figure 221: 3–wheel model, top

Copyright © 2018 by MCFE. All rights reserved.

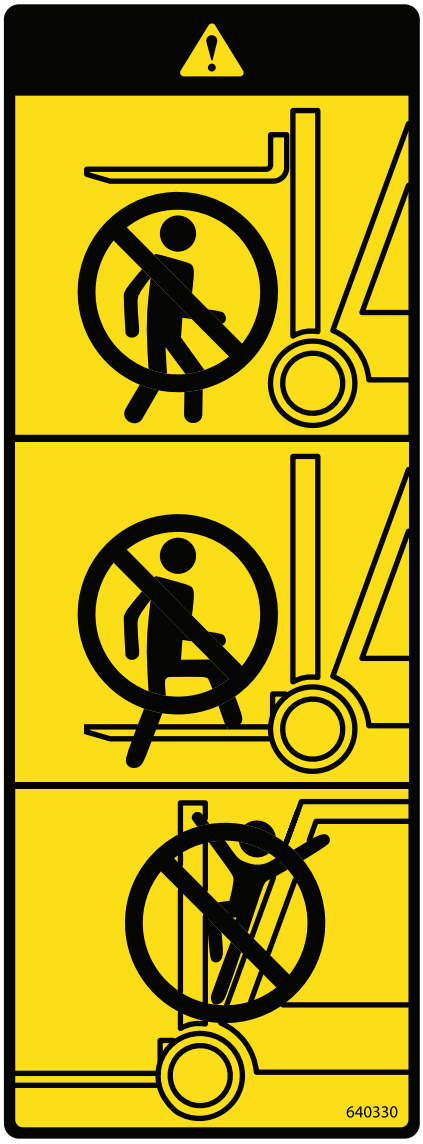

Figure 226: Mast operation warning sticker

Figure 227: Pinch warning sticker

Copyright © 2018 by MCFE. All rights reserved.

	Before daily use (Operator)	Monthly (Owner)	1,000 h or every year (Service)
Examine the functionality of the options, see *Section 14.1 Options*.			C
With the cabin, examine all the installed options	C		

Copyright © 2018 by MCFE. All rights reserved.

REV	DATE:	NAME:	CHANGE:
H	2018-03-08	EP	XFC4/ connector information corrected

11 12 13 14 15 16 17 18 19 20 21 22 23 24 25 26 27 28 29 30

= INTERTWINED POLYESTER TUBE

= CORRUCATED TUBE

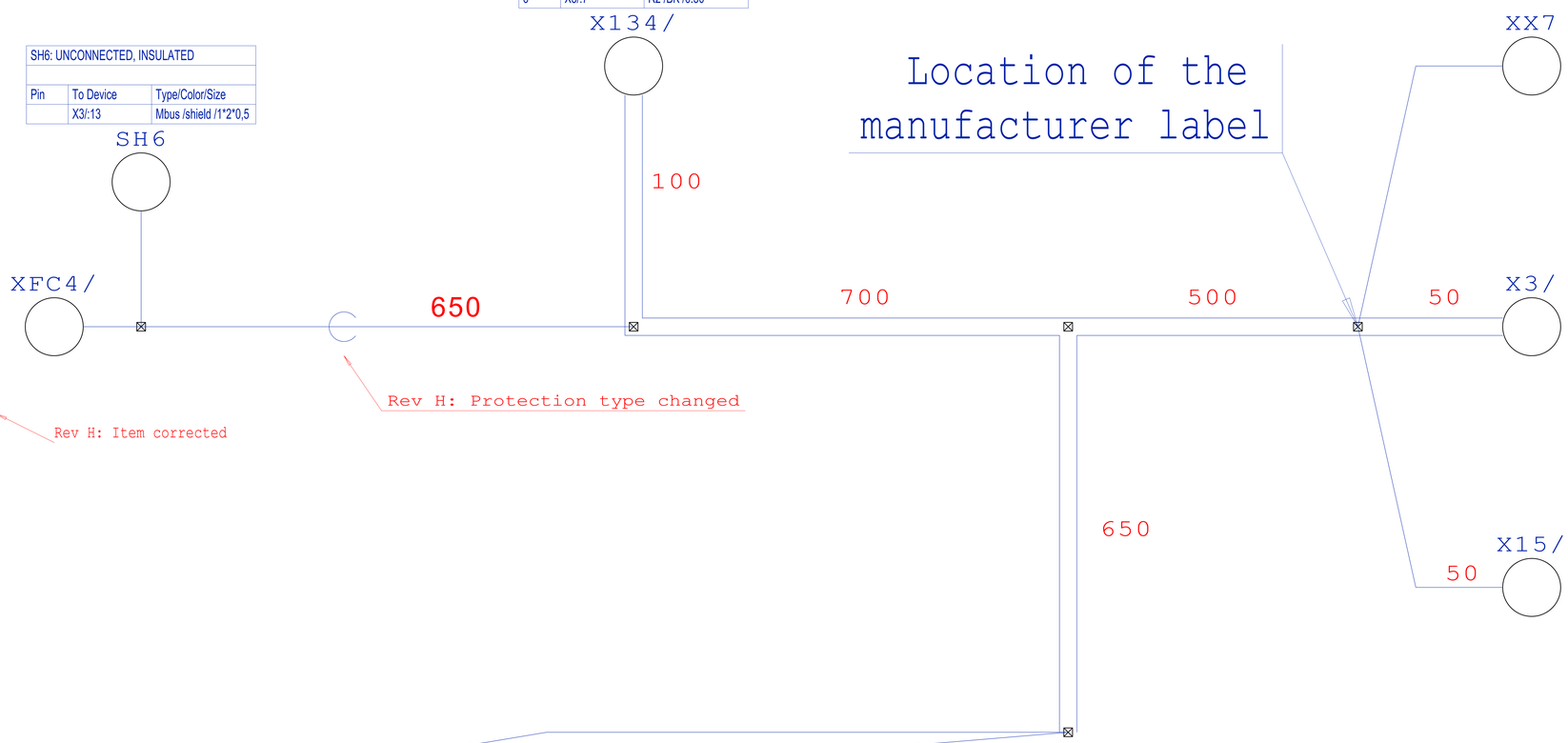

X134/: 602503/602504		
SEAT CONNECTOR		
Pin	To Device	Type/Color/Size
1	X3/:9	R2 /BK /0.50
3	XX7:	R2 /BK /0.50
4	X15/:1	R2 /BK /1.5
5	X15/:2	R2 /BK /1.5
6	X3/:7	R2 /BK /0.50

SH6: UNCONNECTED, INSULATED		
Pin	To Device	Type/Color/Size
	X3/:13	Mbus /shield /1*2*0,5

XFC4/: 617679/617691/617707/617702/617711/617703/617712+617688		
APACHE CONNECTOR		
Pin	To Device	Type/Color/Size
1	X3/:12	Mbus /WH /1*2*0.5
5	X3/:5	R2 /BK /0.50
6	X3/:3	R2 /BK /0.50
9	X3/:11	Mbus /BRN /1*2*0.5
13	X3/:6	R2 /BK /0.50
14	X3/:4	R2 /BK /0.50

XX7: SPLICE		
Pin	To Device	Type/Color/Size
	S8:3	R2 /BK /0.50
	X3/:8	R2 /BK /0.50
	X134/:3	R2 /BK /0.50

X3/: 617680/617700/617702/617703		
BATTERY COVER SUPPLY CONNECTOR		
Pin	To Device	Type/Color/Size
1	S16:2	R2 /BK /0.50
2	S16:3	R2 /BK /0.50
3	XFC4/:6	R2 /BK /0.50
4	XFC4/:14	R2 /BK /0.50
5	XFC4/:5	R2 /BK /0.50
6	XFC4/:13	R2 /BK /0.50
7	X134/:6	R2 /BK /0.50
8	XX7:	R2 /BK /0.50
9	X134/:1	R2 /BK /0.50
10	S8:2	R2 /BK /0.50
11	XFC4/:9	Mbus /BRN /1*2*0.5
12	XFC4/:1	Mbus /WH /1*2*0.5
13	SH6:	Mbus /shield /1*2*0,5
14	S16:6	R2 /BK /1.0
15	S16:5	R2 /BK /1.0

X15/: 617344/617340/617342		
SEAT COMPRESSOR SUPPLY CONNECTOR		
Pin	To Device	Type/Color/Size
1	X134/:4	R2 /BK /1.5
2	X134/:5	R2 /BK /1.5

S8: 621826/475048		
AUTOMATED WORKING LIGHTS SWITCH		
Pin	To Device	Type/Color/Size
2	X3/:10	R2 /BK /0.50
3	XX7:	R2 /BK /0.50

S16: 621826/475048		
WORKING LIGHTS SWITCH CONNECTOR		
Pin	To Device	Type/Color/Size
2	X3/:1	R2 /BK /0.50
3	X3/:2	R2 /BK /0.50
5	X3/:15	R2 /BK /1.0
6	X3/:14	R2 /BK /1.0

CAT Lift Trucks

	DATE:	NAME:
DESIGN.	2016-12-01	RH
CHECK.		
APPROV.		

CIRCUIT DIAGRAM

EP14-20A(C)N(T)
BATTERY COVER WIRE HARNESS FC, 635103

REV K

3-7840_JT

REV	DATE:	NAME:	CHANGE:
G	2018-01-23	EP	K1 termninal type change

11 12 13 14 15 16 17 18 19 20 21 22 23 24 25 26 27 28 29 30

◯ = INTERTWINED POLYESTER TUBE

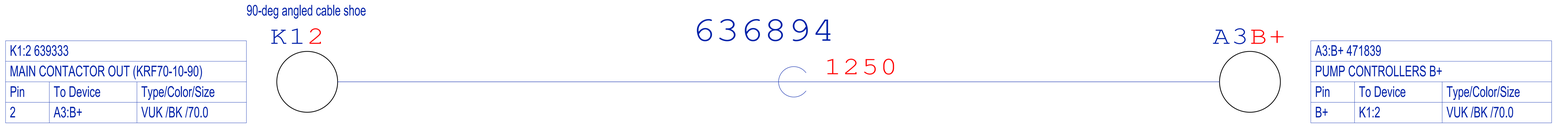

K1:2 639333		
MAIN CONTACTOR OUT (KRF70-10-90)		
Pin	To Device	Type/Color/Size
2	A3:B+	VUK /BK /70.0

A3:B+ 471839		
PUMP CONTROLLERS B+		
Pin	To Device	Type/Color/Size
B+	K1:2	VUK /BK /70.0

Lenghts given = Cutting length

	DATE:	NAME:
DESIGN.	2017-08-28	EP
CHECK.		
APPROV.		

CIRCUIT DIAGRAM

EP14-20A(C)N(T)
POWER CABLE, 636894

12 / 38

REV K

3-7840_JT

11 12 13 14 15 16 17 18 19 20 21 22 23 24 25 26 27 28 29 30

= INTERTWINED POLYESTER TUBE

Steering column

Through kick-panel

XS23/: 621853/619710/621854		
ROAD LIGHTS SWITCH		
Pin	To Device	Type/Color/Size
L1	XS23.2/:1	R2 /BK /0.50
L2	XS23.2/:3	R2 /BK /1.0
L3	XS23.2/:4	R2 /BK /0.50
T1	XS23.2/:2	R2 /BK /0.50
T2	XS23.2/:5	R2 /BK /0.50
T3	XS23.2/:6	R2 /BK /0.50

XS23/ — 636535 — 750 — XS23.2/

Rev G: Item corrected

XS23.2/: 617351/617341/617342		
TO MAIN RLS HARNESS		
Pin	To Device	Type/Color/Size
1	XS23/:L1	R2 /BK /0.50
2	XS23/:T1	R2 /BK /0.50
3	XS23/:L2	R2 /BK /1.0
4	XS23/:L3	R2 /BK /0.50
5	XS23/:T2	R2 /BK /0.50
6	XS23/:T3	R2 /BK /0.50

Front machine compartment

XE11/ — 240 — XS23.1/ — 180 — 350

Rev G: Length added

XE11/: 621532/602504/621555		
LEFT FRONT LIGHT		
Pin	To Device	Type/Color/Size
1	XX108:	R2 /BK /0.50
2	XX109:	R2 /BK /0.50
3	XX115:	R2 /BK /0.50
4	XX110:	R2 /BK /0.50

XS23.1/: 617347/617340/617342		
TO RLS COLUMN HARNESS		
Pin	To Device	Type/Color/Size
1	XX122:	R2 /BK /0.50
2	XK12/:49a	R2 /BK /0.50
3	XX108:	R2 /BK /0.50
4	XK9/:86	R2 /BK /0.50
5	XX107:	R2 /BK /0.50
6	XX115:	R2 /BK /0.50

XE10/ — 210

XE10/: 621532/602504/621555		
RIGHT FRONT LIGHT		
Pin	To Device	Type/Color/Size
1	XX108:	R2 /BK /0.50
2	XX109:	R2 /BK /0.50
3	XX107:	R2 /BK /0.50
4	XX110:	R2 /BK /0.50

50 — 450 — 50 — 200 — X50.2/

X50.2/: 617344/617340/617342		
TO MAIN HARNESS		
Pin	To Device	Type/Color/Size
2	XK12/:P	R2 /BK /0.50

XX107 — XX108 — XX109 — XX110 — XX115

XX107: SPLICE		
Pin	To Device	Type/Color/Size
	XX128:	R2 /BK /0.50
	XS23.1/:5	R2 /BK /0.50
	XE10/:3	R2 /BK /0.50

XX108: SPLICE		
Pin	To Device	Type/Color/Size
	XS23.1/:3	R2 /BK /0.50
	XE10/:1	R2 /BK /0.50
	XE11/:1	R2 /BK /0.50
	X103/:3	R2 /BK /0.50

XX109: SPLICE		
Pin	To Device	Type/Color/Size
	XK9/:87a	R2 /BK /0.50
	XE10/:2	R2 /BK /0.50
	XE11/:2	R2 /BK /0.50

XX110: SPLICE		
Pin	To Device	Type/Color/Size
	XX116:	R2 /BK /0.50
	XE10/:4	R2 /BK /0.50
	XE11/:4	R2 /BK /0.50

XX115: SPLICE		
Pin	To Device	Type/Color/Size
	XX127:	R2 /BK /0.50
	XS23.1/:6	R2 /BK /0.50
	XE11/:3	R2 /BK /0.50

Rear compartment

X103/: 617347/617340/617342		
TO REAR LIGHTS HARNESS		
Pin	To Device	Type/Color/Size
1	XX128:	R2 /BK /0.50
2	XX127:	R2 /BK /0.50
3	XX108:	R2 /BK /0.50
4	XX116:	R2 /BK /0.50
5	XK13/:87a	R2 /BK /0.50
6	XK14/:87a	R2 /BK /0.50

X103/ — 200

X60.2/: 617350/617341/617342		
TO MAIN HARNESS		
Pin	To Device	Type/Color/Size
1	XK14/:86	R2 /BK /0.50
2	XK14/:85	R2 /BK /0.50
3	XK13/:86	R2 /BK /0.50
4	XK13/:85	R2 /BK /0.50

636533

X60.2/ — 200

Routing at right-hand-side of the chassis

1900 — 30

XX127 — XX128 — XX116

XX127: SPLICE		
Pin	To Device	Type/Color/Size
	X67/:3	R2 /BK /0.50
	XX115:	R2 /BK /0.50
	X103/:2	R2 /BK /0.50

XX128: SPLICE		
Pin	To Device	Type/Color/Size
	X67/:2	R2 /BK /0.50
	XX107:	R2 /BK /0.50
	X103/:1	R2 /BK /0.50

XX116: SPLICE		
Pin	To Device	Type/Color/Size
	X67/:4	R2 /BK /0.50
	X103/:4	R2 /BK /0.50
	XX110:	R2 /BK /0.50
	X100.1/:3	R2 /BK /0.50

Optional rear EL-panel

20 — XK14/

XK14/: 621106/475048		
REVERSE LIGHT RELAY		
Pin	To Device	Type/Color/Size
85	X60.2/:2	R2 /BK /0.50
86	X60.2/:1	R2 /BK /0.50
87	XX90:	R2 /BK /0.50
87a	X103/:6	R2 /BK /0.50

30

20 — XK13/

XK13/: 621106/475048		
BRAKE LIGHT RELAY		
Pin	To Device	Type/Color/Size
85	X60.2/:4	R2 /BK /0.50
86	X60.2/:3	R2 /BK /0.50
87	XX90:	R2 /BK /0.50
87a	X103/:5	R2 /BK /0.50

30

20 — XK12/

XK12/: 621106/475048		
LED FLASHER RELAY		
Pin	To Device	Type/Color/Size
49	XX122:	R2 /r /1.0
49a	XS23.1/:2	R2 /BK /0.50
49a	X67/:1	R2 /BK /0.50
P	X50.2/:2	R2 /BK /0.50

30

20 — XK9/

XK9/: 621106/475048		
ROAD LIGHTS ON/OFF RELAY		
Pin	To Device	Type/Color/Size
85	X100.1/:4	R2 /BK /0.50
86	XS23.1/:4	R2 /BK /0.50
87	XX90:	R2 /BK /0.50
87	X100.1/:1	R2 /BK /0.50
87a	XX109:	R2 /BK /0.50

20 — XX90

XX90: SPLICE		
Pin	To Device	Type/Color/Size
	XK14/:87	R2 /BK /0.50
	XK13/:87	R2 /BK /0.50
	XK9/:87	R2 /BK /0.50

70 — X100.1/

X100.1/: 617350/617341/617342		
TO DC/DC HARNESS		
Pin	To Device	Type/Color/Size
1	XK9/:87	R2 /BK /0.50
2	XX122:	R2 /BK /0.50
3	XX116:	R2 /BK /0.50
4	XK9/:85	R2 /BK /0.50

XX122

XX122: SPLICE		
Pin	To Device	Type/Color/Size
	XK12/:49	R2 /r /1.0
	XS23.1/:1	R2 /BK /0.50
	X100.1/:2	R2 /BK /0.50

Rev G: Item corrected

Battery hood

Right-hand-side Switch panel

XS24/: 475048/622268		
EMERGENCY FLASHER SWITCH		
Pin	To Device	Type/Color/Size
5	X67.1/:1	R2 /BK /0.50
10	X67.1/:4	R2 /bl /0.50
17	X67.1/:2	R2 /BK /0.50
18	X67.1/:3	R2 /or /0.50

XS24/ — 550 — 636534 — X67.1/

X67.1/: 617350/617341/617342		
TO MAIN RLS HARNESS		
Pin	To Device	Type/Color/Size
1	XS24/:5	R2 /BK /0.50
2	XS24/:17	R2 /BK /0.50
3	XS24/:18	R2 /or /0.50
4	XS24/:10	R2 /bl /0.50

X67/: 617346/617340/617342		
SIDE CONSOLE SWITCHES CONNECTOR		
Pin	To Device	Type/Color/Size
1	XK12/:49a	R2 /BK /0.50
2	XX128:	R2 /BK /0.50
3	XX127:	R2 /BK /0.50
4	XX116:	R2 /BK /0.50

X67/ — 350

REV	DATE:	NAME:
G	2018-01-23	EP

CHANGE: XX122 added

CAT Lift Trucks

	DATE:	NAME:
DESIGN.	2017-09-06	EP
CHECK.		
APPROV.		

CIRCUIT DIAGRAM

EP14-20A(C)N(T)
ROAD LIGHT
KIT,636533,636534,636535

22 / 38

REV K

3-7840_JT

11 12 13 14 15 16 17 18 19 20 21 22 23 24 25 26 27 28 29 30

◯ = INTERTWINED POLYESTER TUBE

X75/: 622581/475048		
FRONT SCREEN WASHER		
Pin	To Device	Type/Color/Size
1	X65.1/:3	R2 /GR /1.0
2	XX106:	R2 /BL /1.0

X76/: 622581/475048		
REAR WINDOW WASHER		
Pin	To Device	Type/Color/Size
1	X65.1/:7	R2 /BK /1.0
2	XX106:	R2 /BL /1.0

K15: 621106/475048		
REAR GLASS HEATER RELAY		
Pin	To Device	Type/Color/Size
30	XX85:	R2 /RD /1.5
85	XX84:	R2 /BK /0.50
86	X65.1/:13	R2 /BK /0.50
87	XX83:	R2 /RD /1.5
87a	X65.1/:9	R2 /BK /0.50

XX106: SPLICE		
Pin	To Device	Type/Color/Size
	XX104:	R2 /BK /1.5
	X75/:2	R2 /BL /1.0
	X76/:2	R2 /BL /1.0
	X79/:4	R2 /BL /1.5

X30/: 617344/617340/617342 + 617348/617343		
Heater harness		
Pin	To Device	Type/Color/Size
1	26F1:4	R2 /BK /1.0
2	XX104:	R2 /BK /1.0

X100/: 617346/617340/617342		
RLK connection		
Pin	To Device	Type/Color/Size
1	23F1:1	R2 /RD /1.0
2	24F1:2	R2 /RD /0.50
3	XX101:	R2 /BK /1.0
4	XX101:	R2 /BK /0.50

Rev I: Wire gauges change

X25/: 617344/617340/617342+617348/617343		
12V output supply		
Pin	To Device	Type/Color/Size
1	25F1:3	R2 /RD /1.5
2	XX101:	R2 /BK /1.5

Rev I: Polyester tube added

Rev I: New pin for 4mm2 wires
Wire gauge change

XG2/: 620749/620751/639804		
DC/DC CONVERTER		
Pin	To Device	Type/Color/Size
1	XX104:	R2 /BLK /2.5
2	XX103:	R2 /RD /2.5
3	XX105:	R2 /BLK /1.5
4	XX68:	R2 /BK /1.5

Rev I: Wire gauges change

XX104: SPLICE		
Pin	To Device	Type/Color/Size
	XX105:	R2 /BK /2.5
	XX106:	R2 /BK /1.5
	XG2/:1	R2 /BLK /2.5
	X30/:2	R2 /BK /1.0
	XX84:	R2 /BK /1.5

Rev I: Wire gauges change

XX105: SPLICE		
Pin	To Device	Type/Color/Size
	XX96:	R2 /BK /1.5
	XG2/:3	R2 /BLK /1.5
	XX104:	R2 /BK /2.5

XX68: SPLICE		
Pin	To Device	Type/Color/Size
	X79/:5	R2 /BK /2.5
	XG1/:4	R2 /BK /1.5
	XG2/:4	R2 /BK /1.5

XX96: SPLICE		
Pin	To Device	Type/Color/Size
	XX105:	R2 /BK /1.5
	XX100:	R2 /BK /1.5
	X79/:6	R2 /BK /2.5

X79/: 639899/639901/617711		
TO MAIN HARNESS		
Pin	To Device	Type/Color/Size
1	29F1:7	R2 /RD /1.5
2	X65.1/:2	R2 /RD /1.0
3	X65.1/:4	R2 /GN /1.0
4	XX106:	R2 /BL /1.5
5	XX68:	R2 /BK /2.5
6	XX96:	R2 /BK /2.5
7	25F1:3	R2 /RD /1.5
8	30F1:8	R2 /RD /0.50

Rev I: Wire gauges change
Item change

X80.1/: 617346/617340/617342		
TO DLX CABIN HOOD HARNESS		
Pin	To Device	Type/Color/Size
1	XX131:	R2 /BK /1.0
2	X65.1/:6	R2 /RD /1.0
3	X65.1/:5	R2 /GN /1.0
4	XX84:	R2 /RD /1.5

X81.1/: 617345/617340/617342		
TO DLX CABIN HOOD HARNESS		
Pin	To Device	Type/Color/Size
1	XX83:	R2 /RD /1.5
2	XX117:	R2 /RD /1.0
3	X65.1/:10	R2 /RD /0.50

Rev I: Wire gauges change

Rev I: Wire gauges change

XX131: SPLICE		
Pin	To Device	Type/Color/Size
	28F1:6	R2 /RD /1.0
	X80.1/:1	R2 /BK /1.0
	X65.1/:1	R2 /RD /1.0

Rev I: Wire gauges change

XX100: SPLICE		
Pin	To Device	Type/Color/Size
	XX101:	R2 /BK /2.5
	XX96:	R2 /BK /1.5
	XG1/:3	R2 /BL /1.5

XX101: SPLICE		
Pin	To Device	Type/Color/Size
	X100/:3	R2 /BK /1.0
	X100/:4	R2 /BK /0.50
	XG1/:1	R2 /BL /2.5
	XX100:	R2 /BK /2.5
	X25/:2	R2 /BK /1.5

Rev I: Wire gauges change

XX85: SPLICE		
Pin	To Device	Type/Color/Size
	27F1:5	R2 /RD /1.5
	X65.1/:11	R2 /RD /0.50
	K15:30	R2 /RD /1.5

XX84: SPLICE		
Pin	To Device	Type/Color/Size
	XX104:	R2 /BK /1.5
	K15:85	R2 /BK /0.50
	X65.1/:14	R2 /BK /0.50
	X80.1/:4	R2 /RD /1.5

X65.1/: 617682/617691/617702/617703		
TO BATTERY COVER SWITCHES		
Pin	To Device	Type/Color/Size
1	XX131:	R2 /RD /1.0
2	X79/:2	R2 /RD /1.0
3	X75/:1	R2 /GR /1.0
4	X79/:3	R2 /GN /1.0
5	X80.1/:3	R2 /GN /1.0
6	X80.1/:2	R2 /RD /1.0
7	X76/:1	R2 /BK /1.0
9	K15:87a	R2 /BK /0.50
10	X81.1/:3	R2 /RD /0.50
11	XX85:	R2 /RD /0.50
12	XX117:	R2 /RD /0.50
13	K15:86	R2 /BK /0.50
14	XX84:	R2 /BK /0.50
15	XX83:	R2 /BK /0.50

23F1: 475048/475049 + 199085		
Fuse (including connector set)		
Pin	To Device	Type/Color/Size
1	X100/:1	R2 /RD /1.0
A	XG1/:2	R2 /RD /2.5
A	24F1:B	R2 /RD /2.5

24F1: 475048/475049		
Fuse		
Pin	To Device	Type/Color/Size
2	X100/:2	R2 /RD /0.50
B	25F1:C	R2 /RD /2.5
B	23F1:A	R2 /RD /2.5

25F1: 475048/475049		
Fuse		
Pin	To Device	Type/Color/Size
3	X79/:7	R2 /RD /1.5
3	X25/:1	R2 /RD /1.5
C	24F1:B	R2 /RD /2.5

26F1: 475048/475049		
Fuse		
Pin	To Device	Type/Color/Size
4	X30/:1	R2 /BK /1.0
D	XX103:	R2 /RD /2.5

27F1: 475048/475049		
REAR WINDOW HEATER FUSE		
Pin	To Device	Type/Color/Size
5	XX85:	R2 /RD /1.5
E	28F1:F	R2 /RD /1.5

28F1: 475048/475049		
FRONT WIPER AND WASHER FUSE		
Pin	To Device	Type/Color/Size
6	XX131:	R2 /RD /1.0
F	XX103:	R2 /RD /2.5
F	27F1:E	R2 /RD /1.5

29F1: 475048/475049		
REAR WIPER AND WASHER FUSE		
Pin	To Device	Type/Color/Size
7	X79/:1	R2 /RD /1.5
G	30F1:H	R2 /RD /1.5

30F1: 475048/475049		
AUX DEVICES FUSE		
Pin	To Device	Type/Color/Size
8	X79/:8	R2 /RD /0.50
8	XX117:	R2 /RD /1.0
H	XX103:	R2 /RD /2.5
H	29F1:G	R2 /RD /1.5

XX83: SPLICE		
Pin	To Device	Type/Color/Size
	X81.1/:1	R2 /RD /1.5
	X65.1/:15	R2 /BK /0.50
	K15:87	R2 /RD /1.5

XX103: SPLICE		
Pin	To Device	Type/Color/Size
	26F1:D	R2 /RD /2.5
	XG2/:2	R2 /RD /2.5
	30F1:H	R2 /RD /2.5
	28F1:F	R2 /RD /2.5

XX117: SPLICE		
Pin	To Device	Type/Color/Size
	X65.1/:12	R2 /RD /0.50
	30F1:8	R2 /RD /1.0
	X81.1/:2	R2 /RD /1.0

Rev I: Wire gauges change

CHANGE: SOP changes
NAME: EP
DATE: 2018-03-27
REV I

	DATE:	NAME:
DESIGN.	2018-01-10	EP
CHECK.		
APPROV.		

CIRCUIT DIAGRAM

EP14-20A(C)N(T)
DC/DC CONVERTER HARNESS, 638529

32 / 38 REV K

3-7840_JT

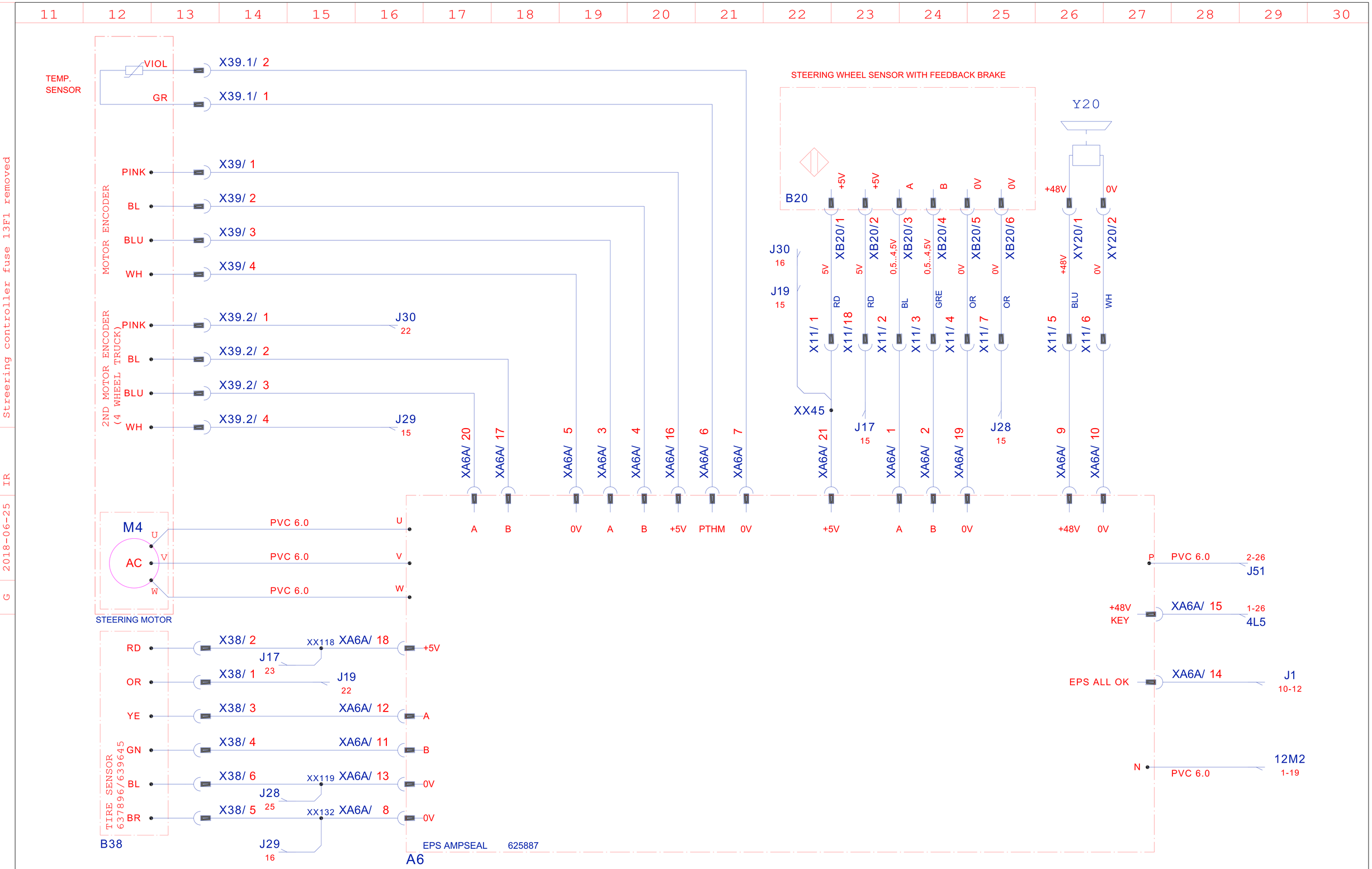

CHANGE:	Streering controller fuse 13F1 removed	
NAME:	IR	
DATE:	2018-06-25	
REV	G	

CAT Lift Trucks

	DATE:	NAME:
DESIGN.	2016-09-20	AKa
CHECK.		
APPROV.		

CIRCUIT DIAGRAM

EP14-20A(C)N(T)
ELECTRIC STEERING

3 / 22

REV H

3-7840

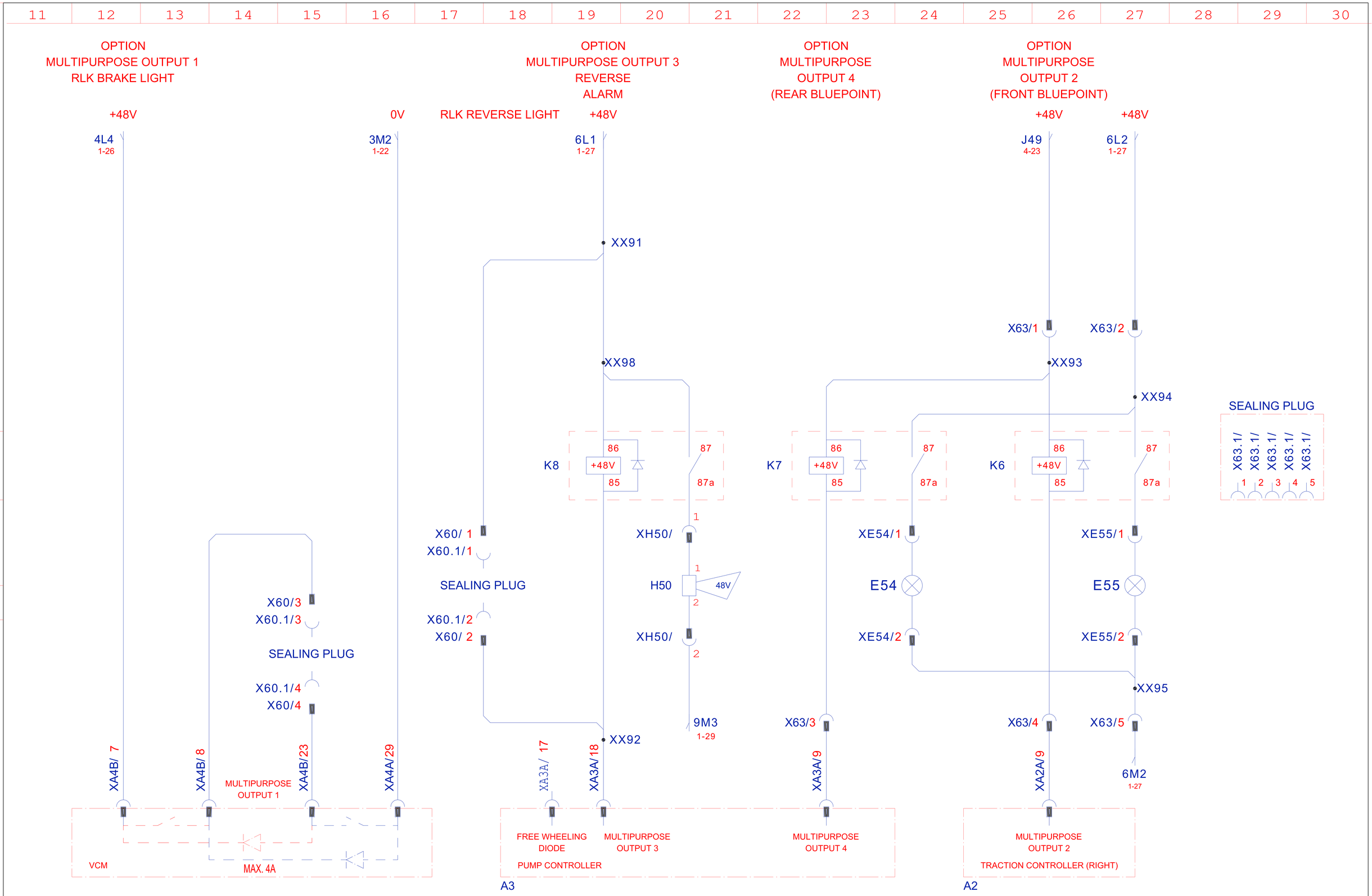

REV	DATE:	NAME:	CHANGE:
H	2018-07-05	EP	XH50/ modified

CAT Lift Trucks

	DATE:	NAME:
DESIGN.	2016-09-20	AKa
CHECK.		
APPROV.		

CIRCUIT DIAGRAM

EP14-20A(C)N(T)
LIGHTS AND ACCESSORIES

13 / 22

REV H

3-7840

CLICK HERE TO **DOWNLOAD** THE COMPLETE MANUAL

- Thank you very much for reading the preview of the manual.
- You can download the complete manual from: www.heydownloads.com by clicking the link below

- Please note: If there is no response to CLICKING the link, please download this PDF first and then click on it.

CLICK HERE TO **DOWNLOAD** THE COMPLETE MANUAL